IOM manual

tapflo®

PE & PTFE
Diaphragm Pumps

Original Instruction
2026 | 1

STOP Read this instruction manual carefully, before you install and operate the pump.

CE

Pump models:

TR/TXR9

TR/TXR20

T/TX50

T/TX100

T/TX200

T/TX400

T/TX800



All about your flow™

www.tapflo.com

CONTENTS

EC DECLARATION OF CONFORMITY 01/EC/PLA/2022 5

EU DECLARATION OF CONFORMITY 01/ATEX/AODD/2022 6

0. GENERAL 7

0.1. Introduction 7

0.2. Warning symbols 7

0.3. Qualification and training of personnel 7

1. INSTALLATION 8

1.1. Operation principle 8

1.2. Receiving inspection 8

1.3. Lifting and transportation 9

1.4. Storage 9

1.5. Foundation 9

1.6. Suction and discharge piping 9

1.6.1. Rotary connections 10

1.6.2. Connection of suction pipe 10

1.6.3. Connection of discharge pipe 10

1.7. Health and safety 10

1.7.1. Protection 10

1.7.2. Explosion hazardous environments – ATEX 11

1.7.3. Air pressure 12

1.7.4. Noise level 12

1.7.5. Temperature hazards 12

1.8. Air connection 13

1.8.1. Air treatment system 13

1.9. Example of installation 13

1.10. Recommended installations 15

1.10.1. Flooded 15

1.10.2. Self-priming 15

1.10.3. Submerged 15

1.10.4. Parallel operation 16

2. OPERATION 17

2.1. Before starting the pump 17

2.2. Starting and operation 17

2.2.1. Dry running 17

2.2.2. Optimization of the pump lifetime 17

CONTENTS

2.2.3. Diaphragm balance ... 18
2.3. Pump stopping ... 18
2.4. Residual risks ... 19
2.5. Disposal after expiration of the expected lifetime ... 19
2.6. Actions in emergency ... 19
3. MAINTENANCE ... 20
3.1. When the pump is new or reassembled ... 20
3.1.1. Performance test ... 20
3.2. Routine inspection ... 20
3.3. Complete inspection ... 20
3.4. Location of faults ... 21
3.5. TR9 / TR20 – Disassembly of the pump ... 22
3.5.1. Before the disassembly procedure ... 22
3.5.2. Disassembly procedure ... 22
3.6. TR9 / TR20 – Assembly of the pump ... 24
3.6.1. Test run ... 24
3.7. T50-T800 – Disassembly of the pump ... 25
3.7.1. Before the disassembly procedure ... 25
3.7.2. Disassembly procedure ... 25
3.8. T50-T800 – assembly of the pump ... 28
3.8.1. Test run ... 28
4. OPTIONS ... 29
4.1. Drum pump – TD... ... 29
4.2. Twin connections – TT... ... 29
4.3. Filter press pump – TF... ... 29
4.4. Barrier pump – TB... ... 30
4.4.1. Guardian calibration procedure ... 30
4.5. Pump with built-on dampener – TK 30
4.5.1. Installation recommendation ... 30
4.6. Pump with integrated flanges – T... -3D/-3A ... 31
5. SPARE PARTS ... 32
5.1. TR9 and TR20 – Spare parts drawing ... 32
5.2. TR9 and TR20 – Spare parts list ... 32
5.3. TR9 and TR20 – Spare parts – Options ... 33
5.4. T50-T100 – Spare parts drawing ... 35
5.5. T50-T100 – Spare parts list ... 35

CONTENTS

5.6. T50-T100 – Spare parts - Options 36
5.7. T200-T400 – Spare parts drawing 38
5.8. T200-T400 – Spare parts list 38
5.9. T200-T400 – Spare parts - Options 39
5.10. T800 – Spare parts drawing 41
5.11. T800 – Spare parts list 41
5.12. Stocking recommendation 42
5.13. How to order parts 43
5.14. Pump code 43
6. DATA 44
6.1. Capacity curves 44
6.2. Capacity changes 45
6.3. Technical data 45
6.4. Dimensions 46
6.5. Tightening torques 48
6.6. Permitted loads on manifolds 48
7. WARRANTY 49
7.1. Warranty form 49
7.2. Returning parts 50
7.3. Warranty 50

EC DECLARATION OF CONFORMITY 01/EC/PLA/2022

Series:

T(…)9…; T(…)20…; T(…)50…; T(…)100…; T(…)200…; T(…)400…; T(…)800…;

Manufactured by Tapflo Sp. z o.o., Poland for:

Tapflo Group AB
Filaregatan 4
442 34 Kungälv, Sweden

This declaration of conformity is issued under the sole responsibility of the manufacturer.

Object of declaration: **PLASTIC AIR OPERATED DIAPHRAGM PUMPS**

The object of the declaration described above is in conformity with the relevant Union harmonisation legislation:

- Directive 2006/42/EC of European Parliament and of the Council of 17 May 2006 on machinery, amending Directive 95/16/EC;

Mr Michał Śmigiel is authorized to compile the technical file.

Tapflo Sp. z o.o., Poland
ul. Czatkowska 4b
83-110 Tczew

CE

Signed for and on behalf of Tapflo Group AB

Per Antonsson
Chief Executive Officer
Kungälv, 16.12.2022

EU DECLARATION OF CONFORMITY 01/ATEX/AODD/2022

Series:
TX(...)9...; TX(...)20...; TX(...)50...; TX(...)100...; TX(...)200...; TX(...)400...; TX(...)800...;
TX(...)25...; TX(...)70...; TX(...)120...; TX(...)220...; TX(...)420...; TX(...)820...;
TX(...)30...; TX(...)80...; TX(...)125...; TX(...)225...; TX(...)425...; TX(...)825...;
TX(...)94...; TX(...)144...; TX(...)244...; TX(...)444...;

Manufactured by Tapflo Sp. z o.o., Poland for:
Tapflo Group AB
Filaregatan 4
442 34 Kungälv, Sweden

This declaration of conformity is issued under the sole responsibility of the manufacturer.

Object of declaration: **CONDUCTIVE AIR OPERATED DIAPHRAGM PUMPS DESIGNED FOR USE IN POTENTIALLY EXPLOSIVE ATMOSPHERES**

The object of the declaration described above is in conformity with the relevant Union harmonisation legislation:

- Directive **2006/42/EC** of European Parliament and of the Council of 17 May 2006 on machinery
- Directive **2014/34/EU** of the European parliament and of the council of 26 February 2014 on Equipment or Protective System intended for use in potentially explosive atmospheres

Applied harmonised standards:

- **EN ISO 80079-36:2016-07**
- **EN ISO 80079-37:2016-07**

ATEX marking:

CE Ex **II 2G Ex h IIC T6...T4 Gb**
II 2D Ex h IIIC T54°C...T124°C Db

Notified body **J.S. Hamilton Poland Sp. z o.o.** performed **type examination** and issued certificate **JSHP 19 ATEX 0018X.**

Signed for and on behalf of Tapflo Group AB

Per Antonsson
Chief Executive Officer
Kungälv, 16.12.2022

0. GENERAL

0.1. Introduction

The Tapflo Air Operated Diaphragm Pump range is a complete series of pumps for industrial applications. The pumps are designed to be safe, simple and easy to use and maintain. The construction is seal-less and without rotating parts. The pumps are suitable for almost all different chemicals used by the industry today.

With proper attention to maintenance, Tapflo Pumps will give efficient and trouble free operation. This instruction manual will familiarise operators with detailed information about installing, operating and maintaining of the pump.

0.2. Warning symbols

The following warning symbols are present in this instruction manual. This is what they say:



This symbol stands next to all safety instructions in this instruction manual where danger to life and limb may occur. Observe these instructions and proceed with utmost caution in these situations. Inform also other users of all safety instructions. In addition to the instructions in this instruction manual, the general safety and accident prevention regulations must be observed.



This signal stands at points in this instruction manual of particular importance for compliance with regulations and directives, for correct work flow and for the prevention of damage to and destruction of the complete pump or its subassemblies.

0.3. Qualification and training of personnel



The personnel in charge of installation, operation and maintenance of the pumps we produce must be qualified to carry out the operations described in this manual. Tapflo shall not be held responsible for the training level of personnel and for the fact that they are not fully aware of the contents of this manual. In case any instructions in this manual are unclear or any information is lacking, please contact Tapflo before handling the pump.

1. INSTALLATION

1. INSTALLATION

1.1. Operation principle

The Tapflo diaphragm pump is driven by compressed air. The two diaphragms are connected by a diaphragm shaft and pushed back and forth by alternately pressurising the air chambers behind the diaphragms using an automatically cycling air valve system.

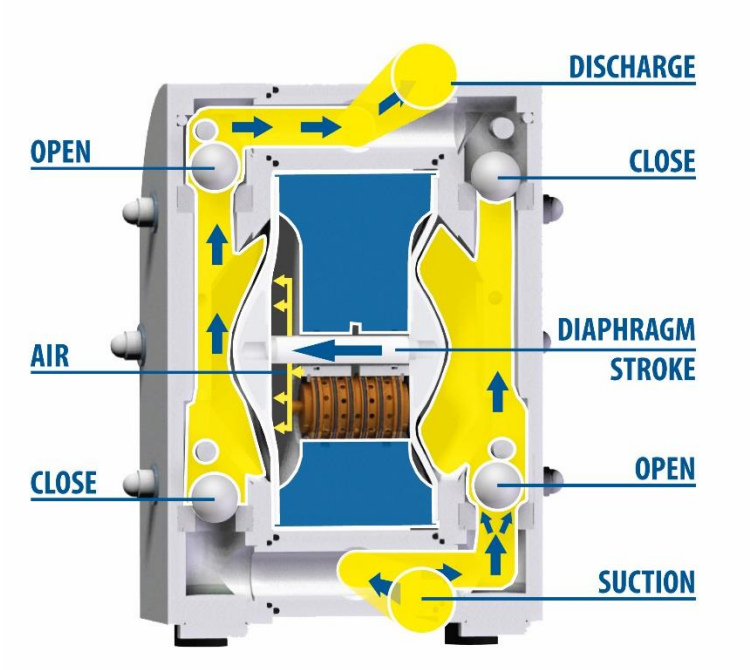

The Suction Cycle:

- **Suction**
  One diaphragm creates a suction action in one chamber (on the right) when being pulled back from the housing.
- **Discharge**
  The other diaphragm simultaneously transmits the air pressure to the liquid in the second chamber (on the left) of the housing, pushing it towards the discharge port.

During each cycle the air pressure on the back of the discharging diaphragm is equal to the head pressure on the liquid side. Tapflo diaphragm pumps can therefore be operated against a closed discharge valve with no negative effect to the life of the diaphragms.

1.2. Receiving inspection

Although precaution is taken by us when packing and shipping, we urge you to carefully check the shipment on receipt. Make sure that all parts and accessories listed on the packing list are accounted for. Immediately report any damage or shortage to the transport company and to us.

1. INSTALLATION

1.3. Lifting and transportation

Before handling the pump check the weight of the pump (see 6.3. *Technical data*). Refer to Your local standards on how to handle the pump. If the weight is excessive to transport by hand it must be lifted using slings and a suitable lifting device e.g. a crane or forklift.
Always use at least two slings and make sure they are secured in such a way to prevent the pump from slipping and that the pump unit is hanging straight.
Never lift the pump with only one sling. Incorrect lifting can cause serious injury and/or damage to the pump.

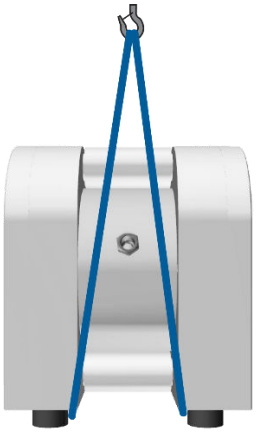

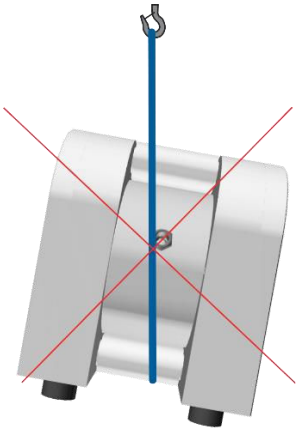

Never lift the pump under pressure.
Be careful that nobody passes under the pump when lifted.
Never try to lift the pump by the manifolds or hoses attached to the pump.
As an option pumps can be equipped with lifting eyebolts connected with the pump pin screws.

1.4. Storage

If the equipment is to be stored prior to installation, place it in a clean location. The pump should be stored in an ambient temperature of 15°C (59°F) to 25°C (77°F) and relative humidity below 65%. It should not be exposed to any heat source e.g. radiator, sun as this could result in a negative way on the tightness of the pump. Do not remove the protective covers from the suction, discharge and air connections which have been fastened to keep pump internals free of debris. Clean the pump thoroughly before installation.

1.5. Foundation

The pump is equipped with vibration absorbing rubber feet. The pump will operate properly without being fixed to a foundation. If fixation is needed for installation purposes, make sure the foundation is able to absorb vibrations. It is essential for the operation of the pump to mount the pump with the feet in a downward direction (see sketch in chapter 1.9. *"Example of installation"*)

1.6. Suction and discharge piping

Suction and discharge piping should be fully supported and anchored near to but independent of the pump. The piping connected to the pump should be a hose, to prevent undue stress and strain on the pump connections and the piping.

1. INSTALLATION

1.6.1. Rotary connections

The suction and discharge connections can be rotated 180°. This simplifies the assembly and installation of the pump. To rotate the connections, the housing nuts must be slightly loosen to ease the manifold rotation and avoid damage on the housing O-rings.
NOTE! Remember to re-torque the housing nuts after this procedure.

1.6.2. Connection of suction pipe

Remember that the suction pipe/connection is the most critical point, especially if the pump is priming. Just a small leakage will dramatically reduce the suction capability of the pump. When connecting the suction pipe, the following is recommended:

1) For satisfactory operation, use a reinforced hose (the suction power may otherwise shrink the hose) or other flexible piping. The internal diameter of the hose should be the same as on the suction connection (at the bottom of the pump) to have best suction capability. If the diameter of a hose is smaller, it will affect the pump's performance or cause its malfunction.
2) Make sure that the connection between the hose and the pump is completely tight, otherwise the suction capability will be reduced.
3) Always use as short suction pipe as possible. Avoid air pockets which can emerge with long piping.

1.6.3. Connection of discharge pipe

For this connection it is only recommended to have a simple and positive flow connection. Use a hose or flexible piping (minimum one meter) between the discharge connection and any rigid fixed piping. Coil the hose at least one turn. All components (hose, pipe, valves etc.) on the discharge piping must be designed for minimum PN 10.

1.7. Health and safety

The pump must be installed according to local and national safety rules.



The pumps are tested with water. If the pumped product can come into reaction with water, please make sure the pump is dry before putting it into operation.



The pumps are constructed for particular applications. Do not use the pump on applications different from that for which it was sold without consulting us to ascertain its suitability.

1.7.1. Protection



In the interest of health and safety it is essential to wear protective clothing and safety goggles when operating, and/or working in the vicinity of Tapflo pumps.

1. INSTALLATION

1.7.2. Explosion hazardous environments – ATEX



The standard PE & PTFE series pumps are not allowed to operate in environments where there is danger of explosion. Static electricity may occur in the pump under operation, which may cause explosion and injury. Special conductive TX pumps are available for such applications. Follow below instructions and local/national rules for safe use.

ATEX (directive 2014/34/EU) classification of Tapflo TX pumps:

II 2G Ex h IIC T6...T4 Gb

II 2D Ex h IIIC T54°C...T124°C Db

Equipment group:	**II** – all other explosive areas than mines;
Category group:	**2** – high level of protection (can be used in zone 1);
Atmosphere:	**G** – gas;
	D – dust;
Explosion group:	**IIC** – gas group (such as acetylene, hydrogen);
	IIIC – dust group (conductive dusts);
Type of protection:	**h** – control of ignition sources;
Temperature class:	**T4, T6** – in the event of a malfunction, the maximum temperature of a surface that may be exposed to gas **T4** = 135°C, **T6** = 85°C;
EPL protection level:	**Gb, Db** – high protection.



Temperature classes and allowable temperatures

The temperature class of the pump depends on the temperature of the pumped medium and ambient temperature. Ambient temperature range depends on pump configuration, follow pump nameplate for allowable range. Contact Tapflo for more information.

Medium temp.	Temperature class / Surface temperature	Temperature class / Surface temperature	Temperature class / Surface temperature
	-20°C ≤ Ta ≤ +40°C	-20°C ≤ Ta ≤ +50°C	-20°C ≤ Ta ≤ +60°C
40°C	T6 / T54°C	T6 / T64°C	T6 / T74°C
50°C	T6 / T64°C	T6 / T64°C	T6 / T74°C
60°C	T6 / T74°C	T6 / T74°C	T6 / T74°C
70°C	T6 / T84°C	T6 / T84°C	T6 / T84°C
80°C	T5 / T94°C	T5 / T94°C	T5 / T94°C
90°C	T4 / T104°C	T4 / T104°C	T4 / T104°C
100°C	T4 / T114°C	T4 / T114°C	T4 / T114°C
110°C	T4 / T124°C	T4 / T124°C	T4 / T124°C



Earth connection of the pump and other equipment

Connect a suitable earth wire to the stainless steel earth connection that is placed on the inside of one of the pump housings. Connect the other end of the earth wire to earth and also make sure that other equipment like hoses/pipes/containers etc. are properly earthed/connected.



Antistatic surface

Pumps in ATEX execution should be cleaned in order to preserve antistatic properties. Layer of dust or other solid particles on the outer surfaces is unacceptable

Dry run in ATEX pump

ATEX approved pumps can run dry without increasing the risk of creating potential ignition sources. Nevertheless, dry run periods should be decreased to minimum as they increase the wear of parts inside of the pump. What is more, when running dry (e.g. during self-priming) the pump should run at a low speed controlled via a needle valve.

1.7.3. Air pressure



The maximum air pressure for Tapflo pumps is 8 bar. Higher air pressure than 8 bar can damage the pump and may cause injury to personnel in vicinity of the pump. If you intend to apply a higher air pressure than 8 bar, please consult us.

1.7.4. Noise level



At tests, the noise level from a Tapflo pump has not exceeded 85 dB(A). Under some circumstances, for example if the pump is operating under high air pressure at low discharge head, the noise can be inconvenient or hazardous for personnel staying for long periods in the vicinity of the pump. This hazard can be prevented by:

- using suitable ear protection;
- lowering the air pressure and/or raising the discharge head;
- leading out the outgoing air from the room by connecting a hose to the muffler connection of the pump;
- using elastomer valve balls (EPDM, NBR or polyurethane) instead of PTFE, ceramic or stainless steel, provided that the elastomer is compatible with the pumped liquid.

1.7.5. Temperature hazards



- Raised temperature can cause damage on the pump and/or piping and may also be hazardous for personnel in the vicinity of the pump/piping. Avoid quick temperature changes and do not exceed the maximum temperature specified when the pump was ordered. See also general max temperatures based on water in chapter 6 *"DATA"*.



- When the pump is exposed to ambient temperature variations or if there is big difference between the temperature of the product and the surrounding, the tightening torques of the housing nuts should be checked periodically as part of preventive maintenance. See *chapters 3.2 "Routine inspection", 6.5 "Tightening torques"*.



- If a hot product is pumped, the pump should not stand still when filled for a longer period of time. This could cause leakage from the valves and contamination and/or damage of the air valve.



- Below 0°C (32°F) plastic materials become more fragile what can cause accelerated wear of parts made of these materials. This is a hazard that has to be accepted when pumping such cold products. Also in such case, when a pump is not operational it should be drained of all liquids.



- Bear in mind that the viscosity of the product changes with temperature. This has to be taken into consideration when selecting the pump.
- The fluid remaining in the connected piping, as well as in the pump itself, may expand because of freezing or heat, which may cause damage to the pump or/and piping, and lead to leakage of the fluid.

1. INSTALLATION

1.8. Air connection

Screw the air hose into the air intake on the centre block of the pump with for example a quick release coupling. For best efficiency, use the same hose diameter as the internal diameter of the connection on the air intake.

1.8.1. Air treatment system

The air valve is constructed for oil-free air. Lubrication of the air is ***not allowed.*** However, if the air is ***very dry*** (laboratory air), we recommend to use a plastic air valve. Maximum air pressure is 8 bar. As prevention purpose, a filtration of the air by means of a 5 micron filter or finer is recommended. Recommended air quality according to PN-ISO8573-1:2010 is particles class 6, water class 4 and oil class 4. Dirt in the air can under unfortunate circumstances be the cause of a breakdown.

To facilitate the operation of the pump we recommend an air treatment system connected to the air supply. These components should be included:

1) Regulator to adjust the air pressure;
2) Manometer to read the actual pressure;
3) Needle valve to adjust the air flow (especially when operating the pump in the lower range of performance);
4) Filter.

These components are included in Tapflo's **Air treatment system** which can be ordered from us.

1.9. Example of installation

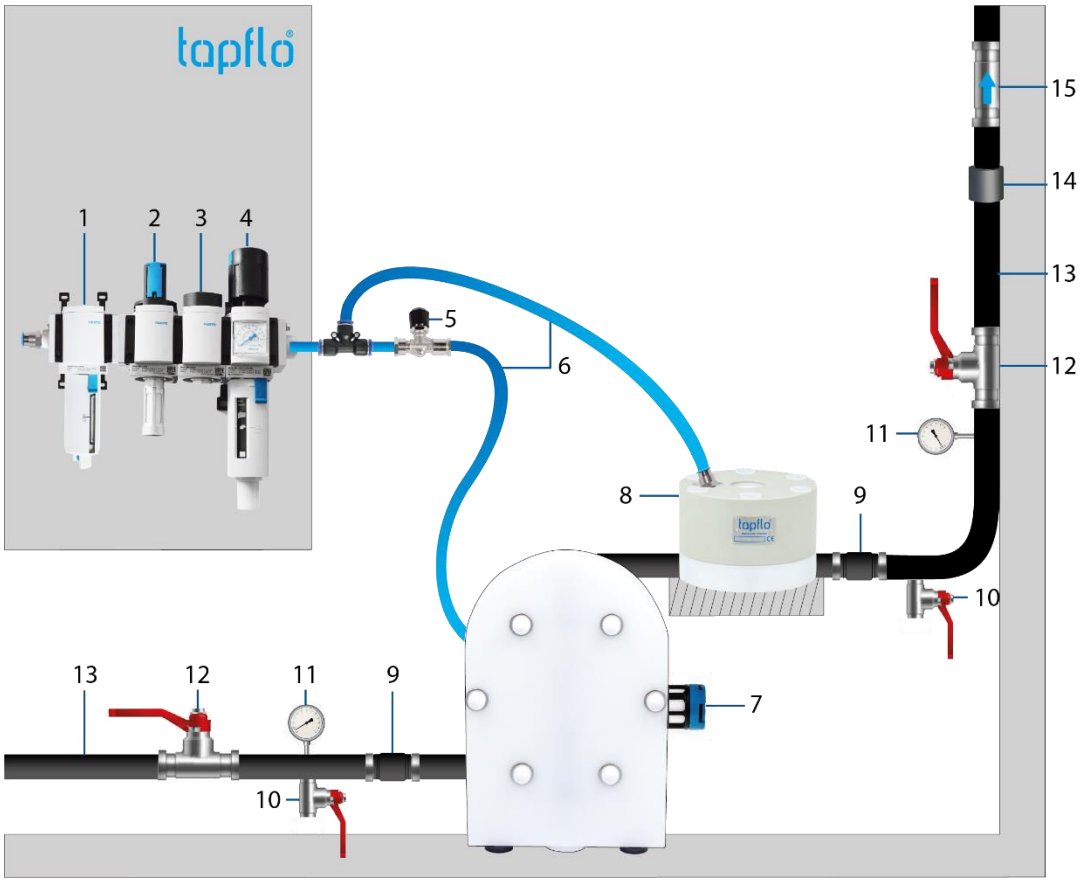

1. INSTALLATION

1. **Water separator** (**OPTIONAL**) – to remove condensate from compressed air when air valve or muffler are freezing. **[6-xxx-2FX]**
2. **On/off valve** for pressurising and exhausting the pump system. Solenoid or manually actuated. 3-way valve recommended to exhaust the air form the pump during shut down. **[6-xxx-003FX | 6-xxx-004FX]**
3. **Soft-start valve** (**OPTIONAL**) – for slow pressurising of the pump system. This device protects the pump wearing parts form rapid pressure surges on the air supply. Particularly useful when pump is starter multiple times per day. **[6-xxx-089FX]**
4. **Filter and pressure regulator** (grade of filtration according to chapter **1.8.1 Air treatment system**). Used to supply appropriate air quality to the pump and regulate the inlet pressure. **[6-xxx-1FX]**
5. **Needle valve**. Used for air flow regulation = pump speed regulation. Make sure the needle valve has appropriate flow rate to supply the pump in full range of operation. **[6-xxx-0FX]**
6. **Flexible pneumatic hose**. Appropriate diameter for each pump size (**see technical update 122-2020**). Keep as short air supply line as possible. For pulsation dampener same pressure as on the pump inlet.
7. **Noise muffler. [6-xxx-25]**
8. **Pulsation dampener** (**RECOMMENDED**) – for pressure variation reduction. It helps to protect the installation and smoothen out the flow. Install as close to the pump as possible.
9. **Compensators / expansion joints**. To remove stress from installation that can be transferred to the pump manifolds. Used to absorb movements and damp vibrations and noise from the piping system.
10. **Drain valves** to flush and drain the pump before taking out for maintenance. Used also to decompress the pump after cutting off form the installation.
11. **Suction and discharge pressure gauge** – to evaluate if the pump operates correctly, according to specification.

12a. **Suction shut-off valve**. When positive inflow exceeds 0,7 bar, the pump must be cut off the suction lie to avoid excessive diaphragm wear. **NOTE!** Never close this valve during operation. Used also to disconnect the pump form the installation for maintenance.

12b. **Discharge shut-off valve**. Used for pump stopping (**see chapter 2.3. Pump stopping**) and disconnecting from installation when maintenance is needed. This valve should be as close to the pump as possible to eliminate negative water hammer effect.

13. **Flexible piping**. To absorb any installation movements, vibrations, reduce noise and relieve the pump manifold form any stress coming from the installation.
14. **Piping fasteners** – the pipeline must be fully supported and anchored to remove any unnecessary stress on the pump manifolds.
15. **Non-return valve** – to protect the pump from possible water hammer effect (caused by abrupt closing of the discharge valve during pump operation). **MANDATORY** when there is a possibility that external pressure can appear in the discharge side of the pump (**see chapter 1.10.4. Parallel operation**).

NOTE! If any of the above guidelines are unclear, please contact Tapflo for explanation.

1. INSTALLATION

1.10. Recommended installations

The Tapflo pump is flexible in the way you are able to install it. The in- and outlet ports can be rotated more than 180° to fit various piping systems.

1.10.1. Flooded

The piping system is designed with a positive suction head. This is the best way of installation where it is necessary to completely empty all liquid from the container, or where viscous (thick) products are transferred.

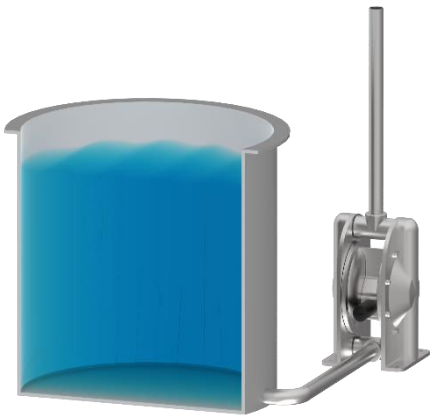

NOTE! **Do not exceed 0,7 bar suction pressure! Higher pressure may cause premature diaphragm failure and irregular pump operation.**

1.10.2. Self-priming

The Tapflo pump is designed to pull a high vacuum. It is able to evacuate an empty suction pipe without any damage to the pump. The suction lift is up to 5 meters (16.4 ft.) from an empty suction pipe and up to 8 meters (26.2 ft.) from a wetted pipe. The suction capability depends on the pump size (see chapter 6 *"DATA"*).



1.10.3. Submerged

All Tapflo pumps may be submerged into the liquid. It is important to make sure that all components which are in contact with the liquid are chemically compatible. The air exhaust must be led to the atmosphere by means of a hose.

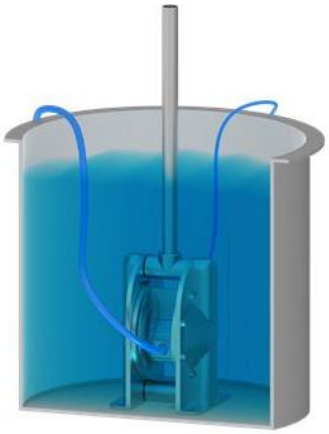

1. INSTALLATION

1.10.4. Parallel operation

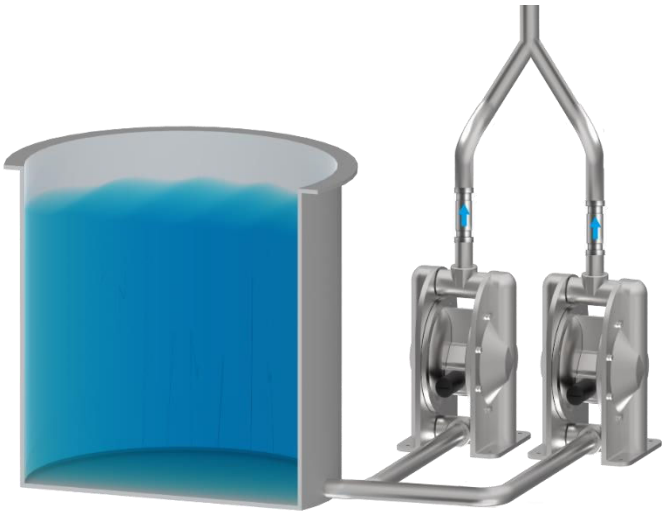

A common situation is when two AODD pumps work in parallel installation. One pump serving as the primary pump and the other one as a back-up pump. In such situation it is mandatory to use a non-return valve on each pump discharge port. This will protect the stand-by pump from the negative effect of the primary unit pumping inside the stand-by pump. As per chapter "2.2.3. Diaphragm balance" the pump diaphragm has to be kept in pressure balance at all times. If we do not use non-return valves we will see pressure rise on the liquid side of the stand-by pump diaphragm without any air support on the air side causing the diaphragms to overstretch and break. This can also lead to leakages through the housing plugs (pos. 33).



NOTE!

Even if all above safety instructions are met and complied with, there still exists a minor danger in the event of a leakage or mechanical damage of the pump. In such case the pumped product can emerge on sealing areas and connections.

2. OPERATION

2.1. Before starting the pump



- Make sure the pump is installed according to the installation instruction (chapter 1).



- When installation is new or reinstalled, check the pump housing nuts tightening torque (see chapter 6.5 *"Tightening torques"*). After approximately one week of operation, the torque should be checked again. **Contact Tapflo for further tightening intervals recommendation.** This is important to prevent possible leakage.



- Fully open all valves on suction line. Leaving the suction valve closed leads to premature diaphragm failure.



- When installation is new or reinstalled, a test run of the pump with water should be conducted to make sure that the pump operates normally and does not leak.

2.2. Starting and operation

- Open the discharge valve.



- ***Note! Considering the suction capacity when air is still in the suction pipe, it is recommended to start with low air pressure/flow (slowly) at the beginning. This is not necessary if the pump is filled with liquid before start.***
- When the pump has been filled with liquid, the air pressure/flow may be raised in order to increase the suction capacity of the pump.
- The performance of the pump can be adjusted through the air supply by using a needle valve and a pressure regulator. The performance can also be adjusted by normal flow control on the discharge side of the system.
- Do not start the pump with closed suction valve and do not close it completely during operation. This will increase pressure loss on the suction side and lead to premature failure of the diaphragms.

2.2.1. Dry running



Although the pump is prepared for dry running it is important to have in mind that long periods of dry run may cause damage to the air valve and circlips. Also an empty pump should operate at low speeds – controlled by a needle-valve.

2.2.2. Optimization of the pump lifetime



- Running at full frequency (maximum air pressure/flow) continuously will cause premature wear of the components. When there is possibility of the pump running dry or/and at full frequency it is recommended to use an air valve with a PET piston. As a general rule, we recommend to run at half of the maximum capacity of the pump. For instance, a T100 pump should run continuously at maximum 50 l/min.



- As stated in chapter 1.8.1 Tapflo recommends to use an appropriate air treatment system in order to extend the pump's lifetime.

2. OPERATION

- If the air humidity is high, use of a water separator or air dryer is recommended. Otherwise on the air discharge side due to decompression, icing on the muffler can appear causing it to shrink and eventually it can shoot out of its socket.
- If the ambient air is humid, icing can occur outside of the muffler. In such case it is recommended to use a longer exhaust of the compressed air (ca. 500 mm / 19.7'').
- If icing / freezing is still a problem with the standard muffler, we recommend using our heavy duty metal muffler. Contact us for more information.
- When the pump is shut down while pumping a liquid containing particles, the particulate matter contained in the liquid will be deposited and get stuck inside the pump chamber. Therefore after finishing work the pump must be emptied of the remaining fluid. Otherwise, when starting the pump again, the diaphragm may get damaged and the shaft may bend leading to grub screw fracture.

2.2.3. Diaphragm balance

For optimal lifetime of the diaphragm, which is the most important wearing part of the pump, it is essential to keep the diaphragm in balance at all times – during operation as well as during standstill. The Tapflo diaphragm pumps' construction ensures that during operation the diaphragms are always kept under optimal conditions. **The pressure difference between the air and liquid side cannot exceed 0,7 bar**. Higher pressure may cause premature diaphragm failure and irregular pump operation.

For more information see chapters **1.9. Example of installation**, **1.10. Recommended installations**, **2.2. Starting and operation** and **2.3. Pump stopping**.

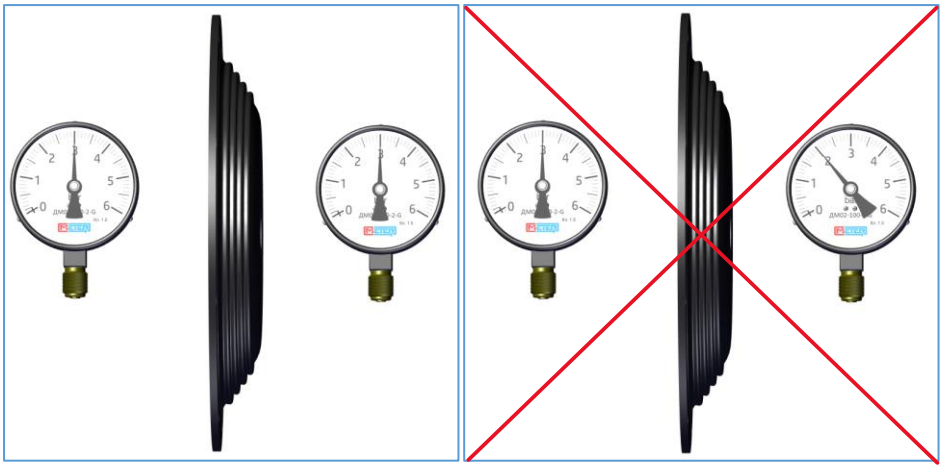

2.3. Pump stopping

The pump can be stopped in two ways:

1) By closing of the discharge valve. The pressure from the system will stop the pump automatically. The pump restarts easily when the valve is opened again. ***NOTE!*** When using this method keep in mind that air must be supplied to the pump. This is essential to keep the diaphragms in balance what protects them from premature failure.

   NOTE! This method should be used when pump will be used in intermittent duty (several starts and stops per day). When the pump is put into stand-by for a longer period of time (e.g. overnight) it should be cut off from air supply (see point 2. below) and relieved from internal pressure.

2) By cutting off the air supply.

NOTE! When using this method make sure that the discharge valve is opened to relief the pumps pressure.

2.4. Residual risks



Even with proper application and observance of all points listed in this operating manual, there is still an estimable and unexpected residual risk when using the pumps. It may leak, fail due to wear, application-related causes or system-related circumstances.

2.5. Disposal after expiration of the expected lifetime



Pump components can be recycled, it must be disposed of properly, according to local regulations. It should be noted that potentially dangerous fluid residues may remain in the pump and can create a hazard to the operator or the environment, therefore the pump has to thoroughly cleaned before disposal.

2.6. Actions in emergency



In case of transferred liquid leakage, the air supply have to be closed and the pressure released. During spillage of an aggressive liquid, local and national safety rules must be followed.

3. MAINTENANCE

3. MAINTENANCE

3.1. When the pump is new or reassembled



If the pump is new or reassembled after maintenance it is important to retighten the pump housing nuts (pos. 37) after approximately one week of operation.
Make sure to use the right torque – *see* chapter 6.5 *"Tightening torques"*.

3.1.1. Performance test

When installation is new, a test run of the pump should be conducted. Gauge the capacity at specific air pressure/flow. This information is useful for checking performance in the future as wear takes place. You will be able to set schedules for maintenance of the pump and to select spare parts to be kept on stock.

3.2. Routine inspection



Frequent observation of the pump operation is recommended to detect problems. Leaking air or liquid from the pump and changes of performance, as well as abnormal noises, can be indication of worn parts or pump malfunction (see chapter 3.4 "Location of faults").
We recommend to conduct a daily check and keep records of the following:

- Any leakage from the pump
- Tightness of all pump fasteners
- Complete inspection in regular intervals has been done

In case any of the above is not fulfilled, do not start the pump and implement corrective actions. Establish a preventive maintenance schedule based on the pump's service history. Scheduled maintenance is especially important to prevent spills or leakage due to diaphragm failure.

3.3. Complete inspection



The intervals for a complete inspection depend upon the operation conditions of the pump. The characteristics of the liquid, temperature, materials used in the pump and running time decide how often a complete inspection is necessary.
Nevertheless, Tapflo recommend to inspect the pump at least once a year and change parts from **KIT AIR** and **KIT LIQ** during this inspection. Tapflo recommend **KIT VAL** to be changed once per 2 years. See chapter 5.11 "Stocking recommendation" for detailed KIT content.

3. MAINTENANCE

3.4. Location of faults

PROBLEM	POSSIBLE FAULT	POSSIBLE SOLUTION
The pump does not run	The air pressure is to low The air connection is blocked Muffler is blocked Air valve is defective Dirt in the pump chamber Diaphragm breakdown	Increase air pressure via a filter-regulator Check / clean air supply connection Check / clean / replace muffler Clean / replace complete air valve Remove debris from the chambers Replace diaphragm
The suction is bad	Suction connection is not tight Suction connection is blocked Muffler is blocked Valve balls are blocked or damaged Valve seats are worn Pump starts with high pressure Air in suction / discharge line Dry suction against discharge pressure	Tighten the suction line Clean suction line Check / clean / replace muffler Check dimensions and shape of valve balls Check dimensions and shape of valve seats Start the pump slowly (see chapter 2.2) Vent suction / discharge line Wet the pump / start without discharge pressure
The pump runs irregular	Valve balls are blocked Sealing in centre block Air valve is defective Diaphragm breakdown Valve seats are worn Icing on the muffler	Check dimensions and shape of valve balls Replace sealing Clean / replace air valve Replace diaphragm Check dimensions and shape of valve seats Improve air quality (see chapters 1.8.1 and 2.2.2)
Bad flow/pressure	Pressure fall in air supply Pressure losses on suction side Air supply / air valve leaking Suction or air connection blocked Muffler is blocked Valve ball worn or broken Valve seats are worn Air in liquid Diaphragm breakdown Icing on the muffler	Increase air pressure via a filter-regulator Check/change installation on suction side Check / repair / replace air supply / air valve Check / clean air supply / suction connection Check / clean / replace muffler Check dimensions and shape of valve balls Check dimensions and shape of valve seats Seal suction line; check / refill container Check / replace diaphragms Improve air quality (see chapters 1.8.1 and 2.2.2)
Liquid leaks from the pump	Screws on the housing not properly tightened O-rings on manifolds damaged Damaged diaphragm Tension / stress form the installation	Check tightening torques of the screws Replace O-rings Check / replace diaphragms Adjust installation, eliminate stress, when using a dampener provide separate support for it (see dampener IOM manual).
Liquid comes out of the muffler	Diaphragm breakdown	Replace diaphragm
Diaphragm breakdown	Wrong selection of material Too high pressure in the installation Long periods of dry running Too high pressure on suction side	Contact us for information on material selection Use air treatment system for protection When dry, run pump slowly (see chapter 2.2) Make sure there is pressure balance between the air and liquid side of the diaphragm

3. MAINTENANCE

3.5. TR9 / TR20 – Disassembly of the pump

The numbers put in brackets, refer to the part numbers in the spare part drawings and spare part lists in chapter *5 "SPARE PARTS"*.

3.5.1. Before the disassembly procedure



Be sure to drain all liquid from the pump. Cleanse or neutralize the pump thoroughly. Disconnect the air supply and then the suction and discharge connections.

3.5.2. Disassembly procedure

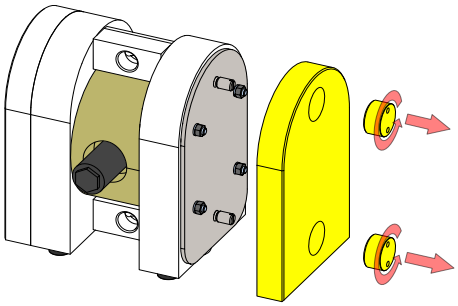

Fig. 3.5.1 ***PTFE only***
Using a pair of pliers unscrew the plugs [571] and lift the PE covers [1181].

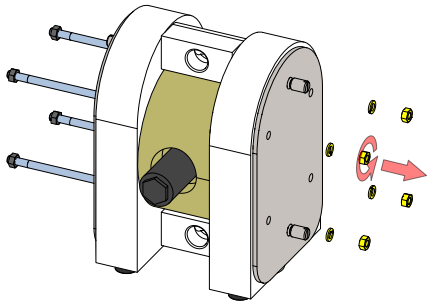

Fig. 3.5.2
Unscrew the housing nuts [37] and carefully remove the pin screws [14].

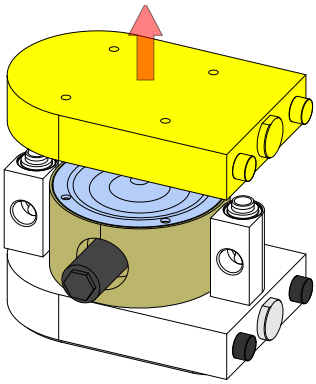

Fig. 3.5.3
Lay down the pump on one side and lift one of the housings [11].

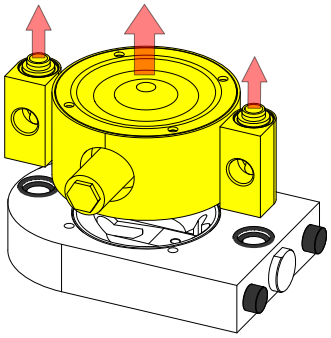

Fig. 3.5.4
Lift the loose manifolds [13] and centre block [12] from the second housing [11].

3. MAINTENANCE

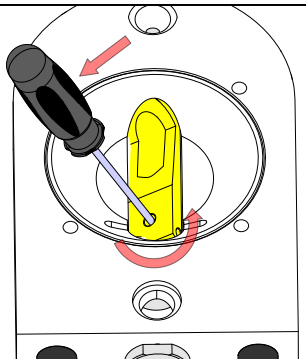

Fig. 3.5.5
Put a tool into the hole of the spacer sleeve [19].

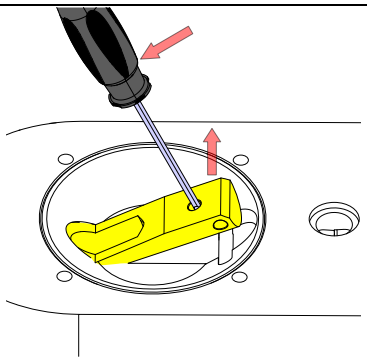

Fig 3.5.6
Lift and pull out the spacer sleeve [19].

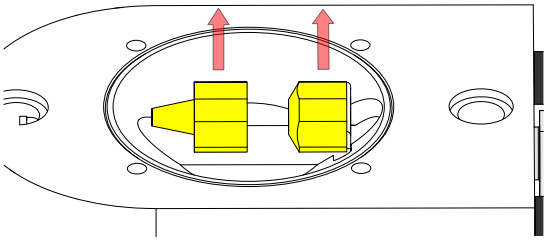

Fig 3.5.7
Take out the valve rods [20] and [21],

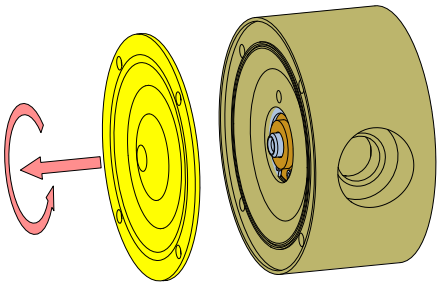

Fig 3.5.8
Unscrew the diaphragms [15] form the air valve [61].

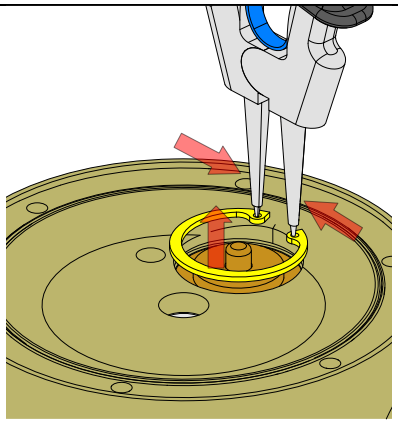

Fig 3.5.9
Using pliers remove both circlips [27] from the centre block [12].

Attention! While doing this, cover yourself with your other hand, as the circlip easily flips away.

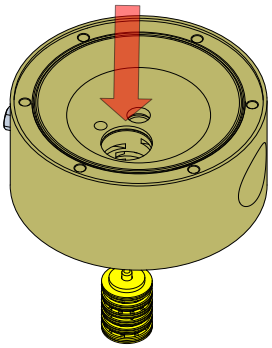

Fig 3.5.10
Press out the air valve [61] by means of a pressing device. Be careful not to damage the brass edges of the air valve.

The pump is now completely disassembled. Check all components for wear or damage and replace if necessary.

When air valve is removed from the centre body check the external O-rings (6 x pos. 30) condition and replace if necessary.

3. MAINTENANCE

3.6. TR9 / TR20 – Assembly of the pump

The assembly procedure is done in the reverse order to the disassembly.
Nevertheless there are a few things that you have to remember in order to assemble the pump correctly.

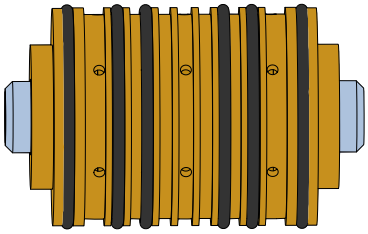

Fig. 3.6.1

When putting the air valve [61] into the centre block [12], apply some water or alcohol on the O-rings to provide smooth insertion of the air valve. It is recommended to use a pressing device for this operation.

NOTE! When inserting the TR9 / TR20 size air valve, replace the shaft with a screw and a nut to make sure the air valve assembly remains properly fastened.

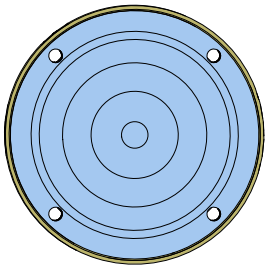

Fig. 3.6.2

When screwing in the diaphragms [15] on the shaft [16], the holes in the diaphragms must align with the holes in the centre block [12]. Sometimes it is necessary to turn the diaphragm back a little bit in order to align the holes.

NOTE! Never try to tighten up the diaphragm to align the holes (like in bigger pump size) because this can lead to breaking of the diaphragm pin.

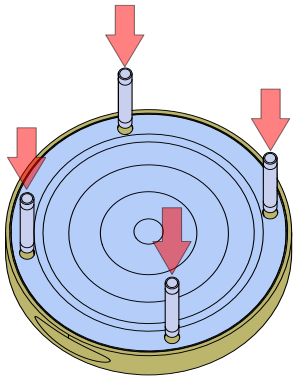

Fig. 3.6.3

When putting in the pin screws [14] take extra care not to damage the diaphragms [15] with the pin screw thread.

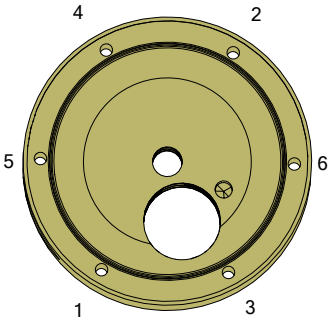

Fig. 3.6.4

When fastening the nuts, remember to do it according to the tightening procedure and with the appropriate torque.
(see chapter 6.5 *Tightening torques*).

NOTE! Keep in mind to periodically retighten pin screw's nuts.

3.6.1. Test run



We recommend you to conduct a test run of the pump before installing it in the system, to check if pump does not start or detect possible leaks due to wrong assembly.

3. MAINTENANCE

3.7. T50-T800 – Disassembly of the pump

The numbers put in brackets, refer to the part numbers in the spare part drawings and spare part lists in chapter 5 *"SPARE PARTS"*.

3.7.1. Before the disassembly procedure



Be sure to drain all liquid from the pump. Cleanse or neutralize the pump thoroughly. Disconnect the air supply and then the suction and discharge connections.

3.7.2. Disassembly procedure

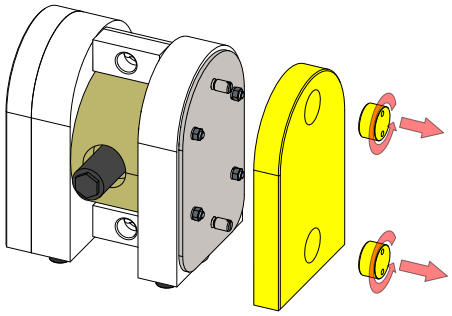

Fig. 3.7.1 ***PTFE only***
Using a pair of pliers unscrew the plugs [571] and lift the PE covers [1181].

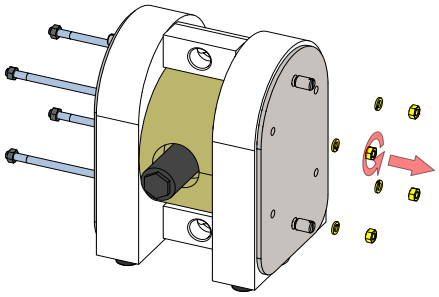

Fig. 3.7.2
Unscrew the housing nuts [37] and carefully remove the pin screws [14].

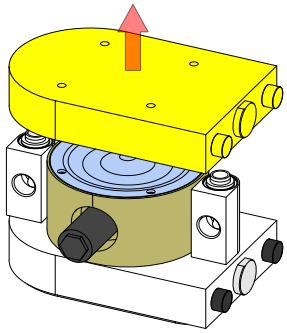

Fig. 3.7.3
Lay down the pump on one side and lift one of the housings [11].

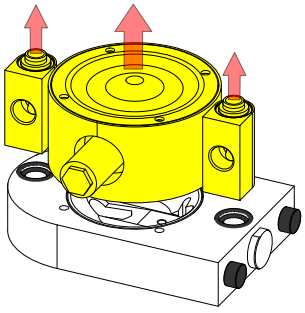

Fig. 3.7.4
Lift the loose manifolds [13] and centre block [12] from the second housing [11].

3. MAINTENANCE

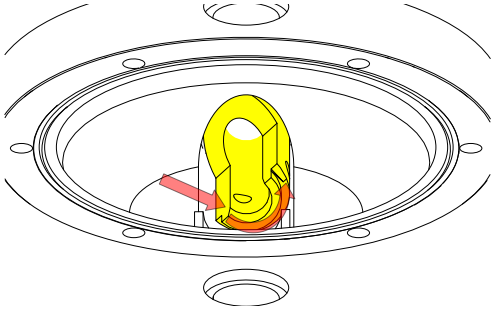

Fig. 3.7.5 To remove the spacer sleeve [19], use a plastic rod and a hammer to knock it out.
NOTE! Be careful not to deform the spacer sleeve.

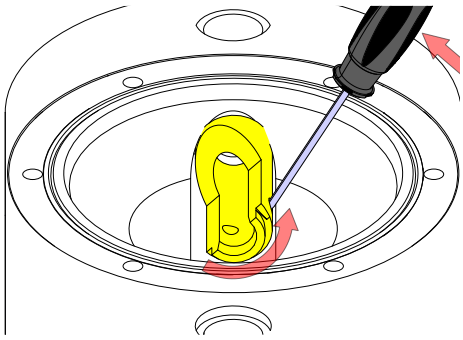

Fig. 3.7.6
Insert our special tool or pin screw [14] into the orifice in the spacer sleeve [19], rotate it.

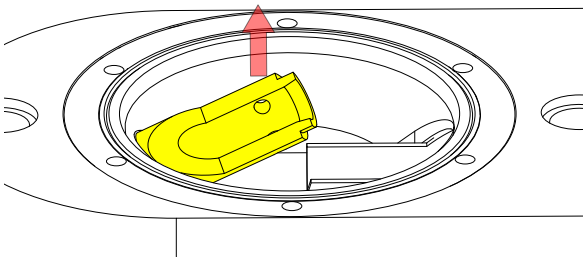

Fig. 3.7.7
Pull out the spacer sleeve [19].

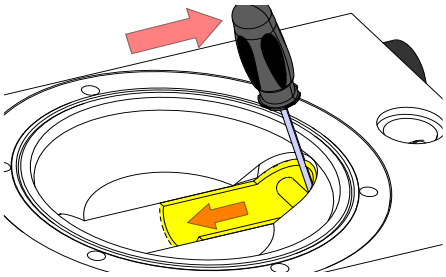

Fig. 3.7.8
Pull out the lower sleeve [212], valve seat [222] and O-ring [43].

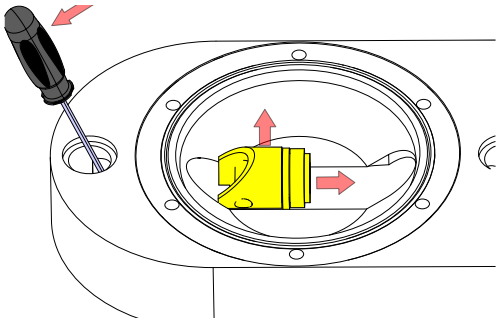

Fig. 3.7.9
Pull out the upper sleeve [202] alongside with the valve seat [222], O-ring [43] and the blocking pin [2021].

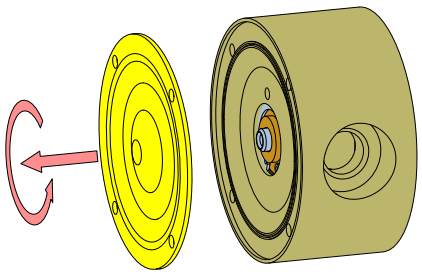

Fig. 3.7.10
Unscrew the diaphragm [15] from one side of the pump.

3. MAINTENANCE

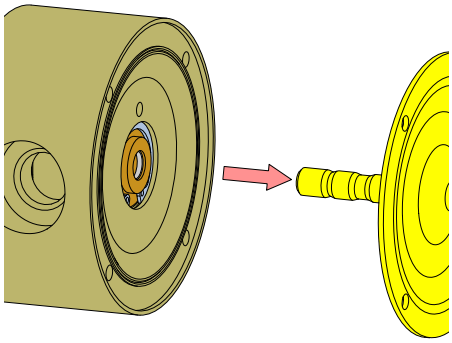

Fig. 3.7.11
Take out the second diaphragm [15] along with the shaft [16].

a) Circlip mounted air valve – T/TX50, T100 and T800

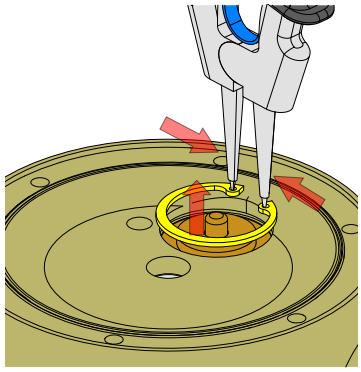

Fig. 3.7.12
Using pliers remove both circlips [27] from the centre block [12].
Attention! While doing this, cover yourself with your other hand, as the circlip easily flips away

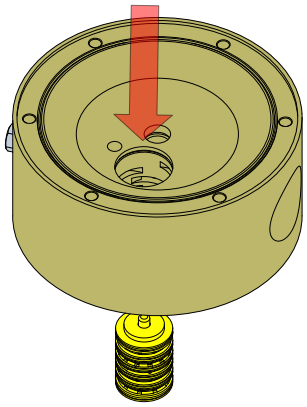

Fig. 3.7.13
Press out the air valve [61] by means of a pressing device. Be careful not to damage the brass edges of the air valve.

b) Plate mounted air valve – T/TX100, T/TX200, T/TX400 from s/n 1106

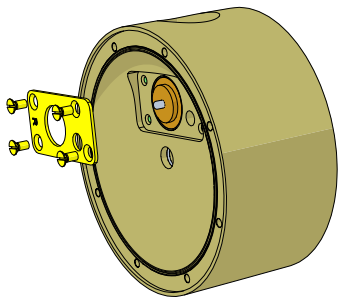

Fig. 3.7.14
Unscrew plate screws [2711] from both sides of the centre body [122] and take out the left and right plate [271].

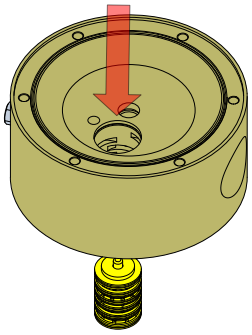

Fig. 3.7.15
Press out the air valve [61] by means of a pressing device. Be careful not to damage the brass edges of the air valve.

3. MAINTENANCE

The pump is now completely disassembled. Check all components for wear or damage and replace if necessary.

When air valve is removed from the centre body check the external O-rings (6 x pos. 30) condition and replace if necessary.

3.8. T50-T800 – assembly of the pump

The assembly procedure is done in the reverse order to the disassembly.
Nevertheless there are a few things that you have to remember in order to assemble the pump correctly.

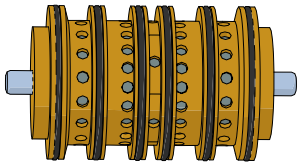	**Fig. 3.8.1** When putting the air valve [61] into the centre block [12], apply some water or alcohol on the O-rings to provide smooth insertion of the air valve. It is recommended to use a pressing device for this operation.
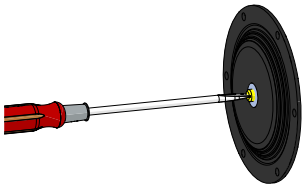	**Fig. 3.8.2** When there is need to replace the diaphragm pin screw [1652], while screwing it into the diaphragm [15] make sure the pin screw goes all the way.
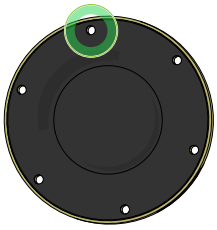	**Fig. 3.8.3** When screwing in the diaphragms [15] on the shaft [16], the holes in the diaphragms must align with the holes in the centre block [12]. If the holes do not align, it is necessary to turn the diaphragm forward a little bit harder in order to align the holes. **NOTE!** Do not turn the diaphragm backwards, this will create clearance between the diaphragm and shaft and can lead to premature failure.
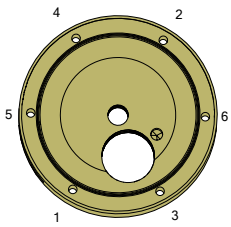	**Fig. 3.8.4** When fastening the domed nuts, remember to do it according to the tightening procedure and with the appropriate torque. (see chapter 6.5 *Tightening torques*). ***NOTE!*** Keep in mind to periodically retighten pins screw's nuts.

3.8.1. Test run



We recommend you to conduct a test run of the pump before installing it in the system, to check if pump does not start or detect possible leaks due to wrong assembly.

4. OPTIONS

4.1. Drum pump – TD...

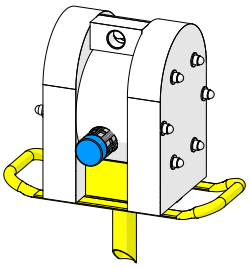

This solution is ideal if we want the pump to be mobile. It is equipped with a stainless steel carrying handle and a suction tube which is screwed in directly in to the inlet manifold. The standard tube length is 1200 mm. You can easily take the pump off a barrel or container and move it to another one.

Available for pump sizes:

- TDR20, TD50 and TD100

Note! For spare parts list see chapter 5. "Spare parts".

4.2. Twin connections – TT...

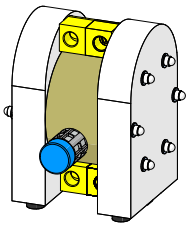

Tapflo pumps can be fitted with double inlet/outlet. This allows to have "two pumps in one". It is used for blending, mixing or recirculation of liquids. Both pump chambers are separated so, the liquid does not mix.

Available for pump sizes:

- TRT9, TRT20, TT50, TT100, TT200 and TT400

Note! For spare parts list see chapter 5. "Spare parts".

4.3. Filter press pump – TF...

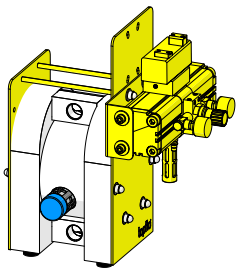

The Tapflo filter press pump is a ready, compact product that can be installed directly on the filter press. The pump is equipped with a booster which amplifies the pressure in a 2:1 ratio. As a result we can achieve up to 16 bar on the discharge of the pump (depending on pump size). As a standard the booster is equipped with a pressure regulator and two manometers. In comparison to a standard pump the TF version is equipped with reinforcement plates and special air valve with PET piston (6-xxx-61-318).

We also recommend to use aluminium centre body (**-6A** option) instead of standard PP for better durability.

Available for pump sizes:

- TF50, TF100, TF200 and TF400

Note! For spare parts list see chapter 5. "Spare parts".

Note! Maximum pressure may vary, when selecting optional pressure booster

4. OPTIONS

4.4. Barrier pump – TB...

With its special construction and a fully pneumatic control system („Guardian") the barrier pump is perfect when diaphragm rupture has to be immediately detected in order to avoid product leak to the environment and the air distribution system. When rupture is detected the pump is automatically stopped and an alarm can be generated.
Available for pump sizes:

TRB20, TB50, TB100, TB200 and TB400

Note! For spare parts list see chapter 5. "Spare parts".

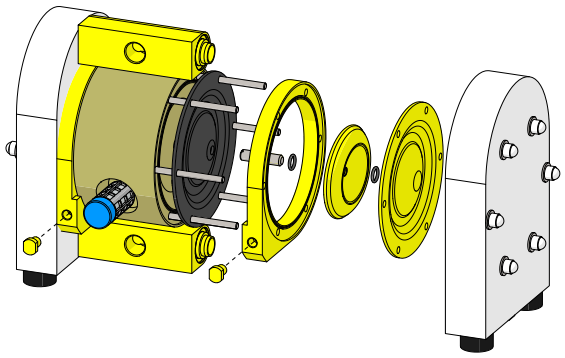

4.4.1. Guardian calibration procedure

For calibration of Guardian you should perform the following steps:

1. Remove the M5 plug and connect an external pressure gauge to port described as "Set point O/P".
2. Turn the set point adjustment screw counter-clockwise until it turns freely.
3. Plug all other open ports (except reset) and turn the air supply on.
4. Adjust the set point adjustment screw clockwise until the pressure gauge indicates 0.5 bar below the required set point (i.e. 3.0 bar switching = 2.5 bar set).
5. Turn off the air supply.
6. Remove the pressure gauge, and re-install the M5 plug.
7. The calibration is now complete and the system is ready for use.

4.5. Pump with built-on dampener – TK ...

If you are looking for an effective way to eliminate pressure variations on the pump discharge and you have limited space in your installation, the built-on dampener is an ideal solution. It provides all the advantages of using a standard Tapflo DT dampener but is a compact solution. The dampener housing is also the pump manifold so you do not have to worry about connecting the dampener to the pump. This solution does not affect the pump flow nor the dampening effect.

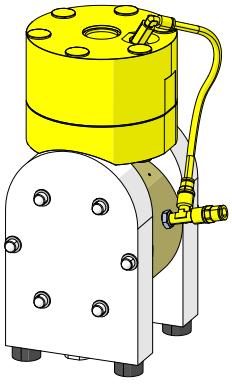

Available for pump sizes:

- TRK20, TK50, TK100, TK200

Note! For spare parts list see chapter 5. "Spare parts".

4.5.1. Installation recommendation

- Build-on dampener should be supplied with the same air flow and pressure as a pump is.
- When leaving factory, TK pump consist of complete pneumatic equipment, like air tubes and pneumatic push-in fittings, to fulfil above. Remember to connect pneumatic equipment after pump maintenance.
- Recommend check valve after TK pump outlet. If TK pump is placed in a system with other pumps or in a pressurized system, the diaphragm on the dampener will have pressure on the liquid side even if pump is shut off.

4.6. Pump with integrated flanges – T... -3D/-3A

Pumps with integrated flanges are a robust and solid design. When there is a risk of transferring of vibration from the installation to the pump, the solid manifolds provide better stability and sealing for the pump. Using this solution we can connect the pump to the installation by a flange (DIN, ANSI) or through a BSP thread.

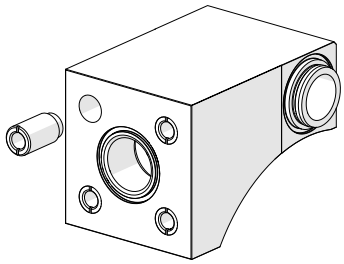

Available for pump sizes:

- T50, T100, T200, T400

Note! For spare parts list see chapter 5. "Spare parts".

5. SPARE PARTS

5. SPARE PARTS

5.1. TR9 and TR20 – Spare parts drawing

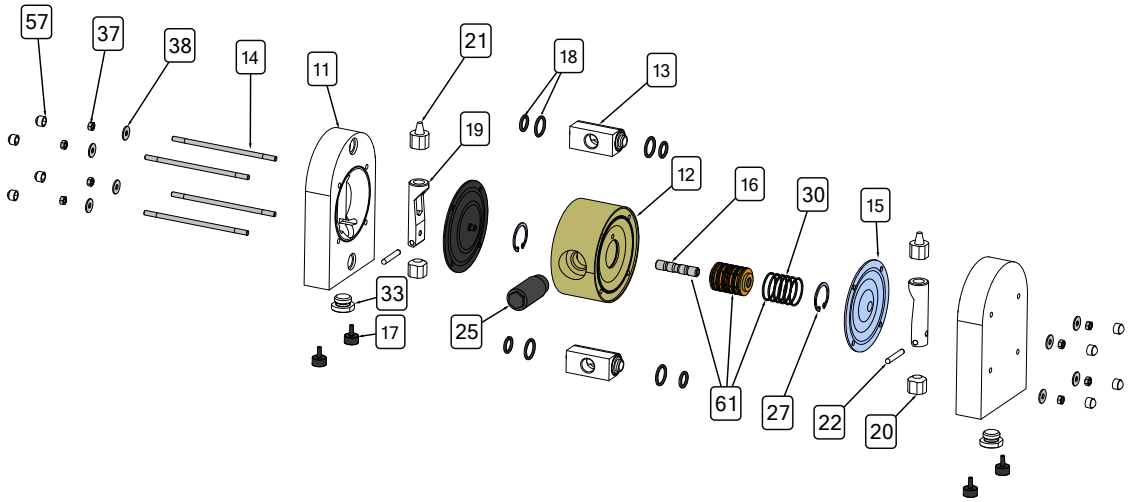

5.2. TR9 and TR20 – Spare parts list

Pos.	Q-ty	Description	Material	KIT LIQ	KIT AIR
11	2	Housing	PE or PTFE		
12	1	Centre block	PP		
13	2	In/Outlet	PE or PTFE		
14	4	Pin screw	A4-80		
15	2	Diaphragm	EPDM*, PTFE, NBR* or FKM	x	
16	1	Diaphragm shaft (part of air valve assembly)	AISI 316L		
17	4	Rubber foot	NBR		
18	4	O-ring set (in/outlet)	PTFE/EPDM, EPDM, FKM, NBR* or FEP/FKM***	x	x
19	2	Spacer sleeve	PE or PTFE		
20	2	Lower rod	PTFE	x	
21	2	Upper rod	PTFE	x	
22	2	Pin	PTFE	x	
25	1	Muffler	Acetal / felt		x
27	2	Circlip	Cr3 coated steel		
30	6	O-ring	NBR (standard), EPDM or FKM		
33	2	Plug	PE or PTFE		
37	8	Nut	A4-70		
38	8	Washer	A4-70		
57	8	Nut cover	PP		
61	1	Air valve complete	Body: brass (standard), AISI 316L or PET, O-rings: NBR (standard), EPDM or FKM		x

* = TR20 only

** = Standard on PTFE pumps from serial number 1012 ....

*** = Standard in pumps with PTFE diaphragms from serial No 1301 .... (TR20) and from 1405 .... (TR9)

FEP/FKM O-rings do not fit on older in/outlets (pos. 13). Older pumps have PTFE/EPDM as standard.

5. SPARE PARTS

5.3. TR9 and TR20 – Spare parts – Options

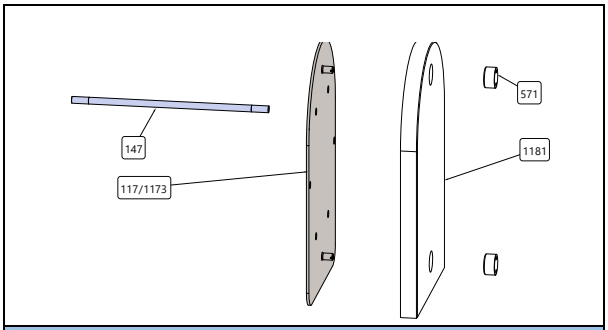

Stainless steel reinforcement (std. on ATEX PTFE)			
Pos.	Q-ty	Description	Material
117	2	Reinforcement plate	AISI 316L
147*	4	Pin screw	A4-80

Stainless steel / PE reinforcement**			
Pos.	Q-ty	Description	Material
1173	2	Reinforcement plate	AISI 316L
1181	2	Cover	PE
147	4	Pin screw	A4-80
571	4	Plug	PE

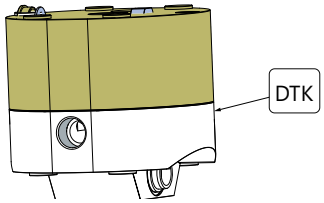

Built-on dampener*			
Pos.	Q-ty	Description	Material
DTK-xxx	1	Built-on dampener assembly	-
6-xx1-112	1	Dampener housing / pump outlet	PE, PTFE
6-xx1-12	1	Dampener centre body	PP
6-xx0-15	1	Dampener diaphragm	EPDM*, PTFE, NBR*, PTFE 1705b
6-xx0-37	8	Dampener nut	A4-70
6-xx0-38	8	Dampener washer	A4-70
6-xx0-36	3	Dampener PE seal	PE
6-xx0-47	3	Dampener O-ring	NBR, EPDM, FKM
6-xx1-16	1	Dampener shaft	AISI 316L
6-xx1-14	4	Dampener pin screw	A4-80
6-xx1-25	1	Dampener muffler	PPM-F
6-xx1-27	1	Dampener blocking ring	PE

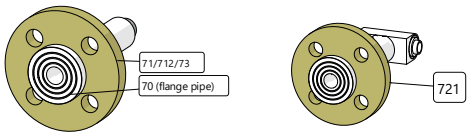

Flange connections*			
Pos.	Q-ty	Description	Material
70	2	Flange pipe (thread)	PE, PTFE
71	2	ANSI flange ring	PP, PTFE, AISI316L
73	2	DIN flange ring	PP, PTFE, AISI316L
701	2	Flange pipe O-ring	FEP/FKM, EPDM, NBR
712	2	JIS flange ring	PP, PTFE, AISI316L
721	2	Integrated manifold with loose flange	PP, PTFE

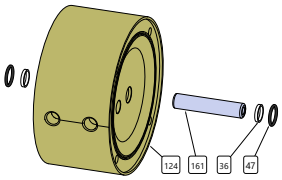

External air supply			
Pos.	Q-ty	Description	Material
36	2	Centerblock sealing	PE
47	2	O-ring	NBR (std.), EPDM, FKM
124	1	Centerblock	PP
161	1	Shaft	AISI 316L

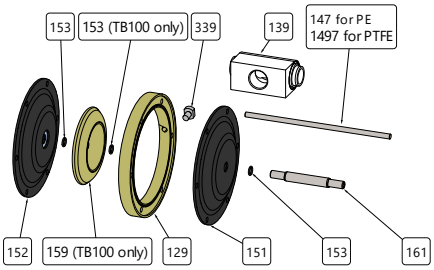

Double diaphragm system*			
Pos.	Q-ty	Description	Material
129	1	Set of spacers (right + left)	PP
139	2	In/outlet	PE, PTFE
149	4	Pin screw for PE pump	A4-80
1497		Pin screw for PTFE pump	
151	2	Air side diaphragm	EPDM*, PTFE, NBR* or FKM
152	2	Liquid side diaphragm	EPDM*, PTFE, NBR* or FKM
153	4	Diaphragm O-ring	EPDM, FKM, NBR

5. SPARE PARTS

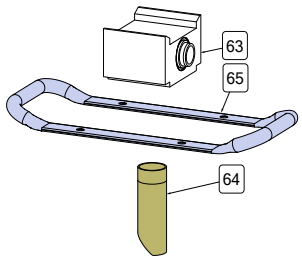

Drum pump*			
Pos.	Q-ty	Description	Material
63	1	Drum inlet	PE, PTFE
64	1	Pump tube	PP, PTFE
65	1	Handle	AISI 316L

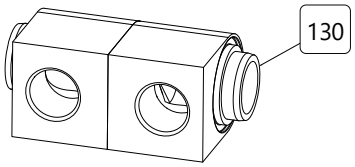

Twin connection			
Pos.	Q-ty	Description	Material
130	2	Twin in/outlet	PE, PTFE

161	1	Diaphragm shaft (part of air valve assembly)	AISI 316L
159	2	Spacer plug	PP
619	1	Air valve complete	*See pos.61*

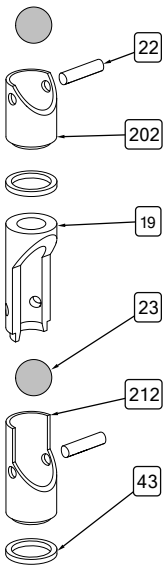

Valve ball version (no sign)*			
Pos.	Q-ty	Description	Material
23	4	Valve ball	EPDM, PTFE, NBR, FKM, AISI 316L, PU
19	2	Spacer sleeve	PE, PTFE
202	2	Upper sleeve	PE, PTFE
212	2	Lower sleeve	PE, PTFE
22	4	Valve ball stop	PE, PTFE
43	4	OP-ring	PTFE

5. SPARE PARTS

5.4. T50-T100 – Spare parts drawing

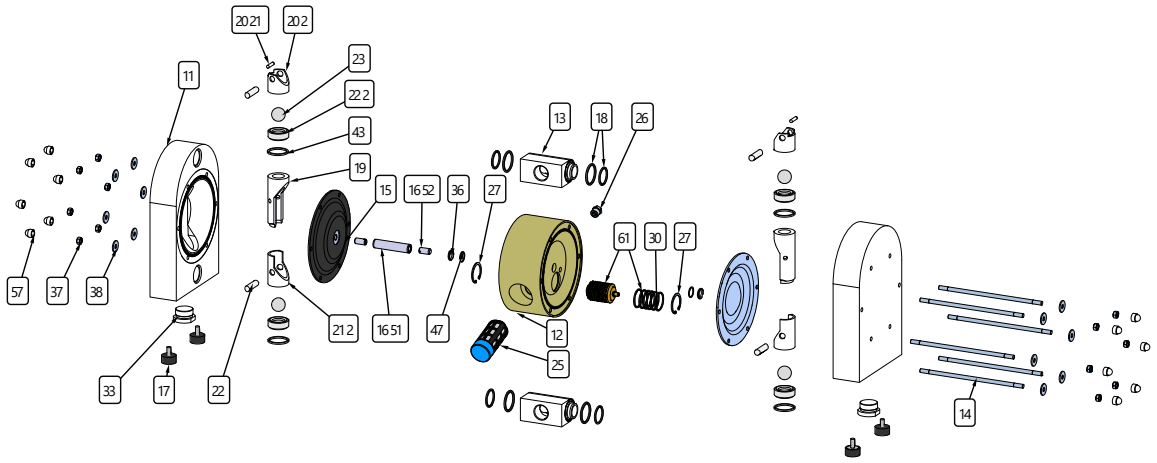

5.5. T50-T100 – Spare parts list

Pos.	Q-ty	Description	Material	KIT LIQ	KIT AIR	KIT VAL
11	2	Housing	PE, PTFE			
12	1	Centre block	PP			
13	2	In/Outlet	PE, PTFE			
14	6	Pin screw	A4-80			
15	2	Diaphragm	EPDM, PTFE, NBR, FKM*	x		
1651	1	Diaphragm shaft	AISI 304L		x	
1652	2	Grub screw	8.8 steel	x		
17	4	Rubber foot	NBR			
18	4	O-ring set (in/outlet)	PTFE/EPDM, EPDM, FKM, NBR, FEP/FKM***	x	x	
19	2	Spacer sleeve	PE, PTFE			x
202	2	Upper sleeve	PE, PTFE, AISI 316L			x
2021	2	Blocking pin	PTFE, PE**			x
212	2	Lower sleeve	PE, PTFE, AISI 316L			x
22	4	Valve ball stop	PE1000, PTFE, PU, AISI 316L			x
222	4	Valve seat	PE1000, PTFE, PU, AISI 316L			x
23	4	Valve ball	EPDM, PTFE, NBR, FKM, AISI 316L, PU or ceramic	x		
25	1	Muffler	Acetal/felt		x	
26	1	Air intake adapter	Brass			
27	2	Circlip	Cr3 coated steel			
30	6	O-ring	NBR (standard), EPDM, FKM			
33	2	Plug	PE, PTFE			
36	2	Centerblock seal	PE		x	
37	12	Nut	A4-70			
38	12	Washer	A4-70			
43	4	O-ring (valve seat)	EPDM, PTFE, NBR, FKM	x		
47	2*/4**	O-ring (back up for 36)	NBR (standard), EPDM, FKM		x	
57	12	Nut cover	PP			
61	1	Air valve complete	Body: brass (standard), AISI 316L or PET, O-rings: NBR (standard), EPDM or FKM		x	

* = T50 only
** = T100 only
*** = FEP/FKM standard on pumps with PTFE diaphragms from serial No 1106 .... FEP/FKM O-rings do not fit on older in/outlets (pos. 13). Older pumps have PTFE/ EPDM in std.

5. SPARE PARTS

5.6. T50-T100 – Spare parts - Options

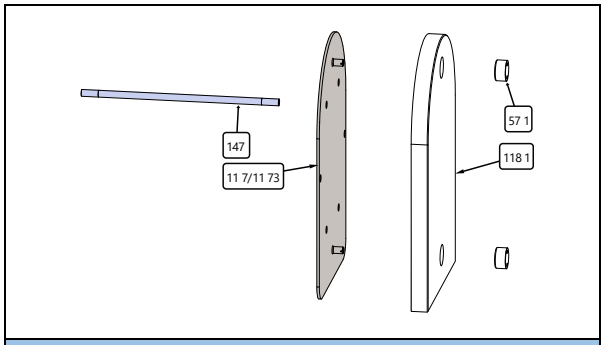

Stainless steel reinforcement (std. on ATEX PTFE)			
Pos.	Q-ty	Description	Material
117	2	Reinforcement plate	AISI 316L
147	6	Pin screw	A4-80
Stainless steel / PE reinforcement			
Pos.	Q-ty	Description	Material
1173	2	Reinforcement plate	AISI 316L
1181	2	Cover	PE
147	6	Pin screw	A4-80
571	4	Plug	PE

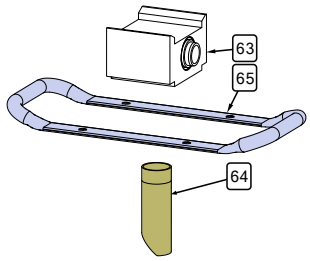

Drum pump			
Pos.	Q-ty	Description	Material
63	1	Drum pump inlet	PE, PTFE
64	1	Pump tube	PP, PTFE
65	1	Handle	AISI 316L

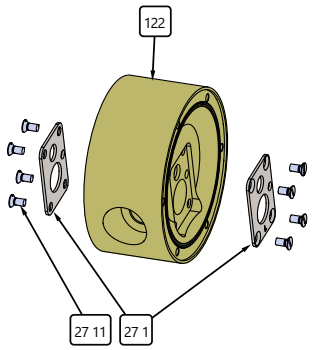

Plate mounted air valve (std. in TX100 form 1106)			
Pos.	Q-ty	Description	Material
122	1	Centerblock	PP, PP Con.
271	1	Set of 2 plates	AISI 316L
2711	8	Screws	A4-70

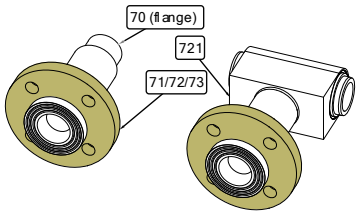

Flange connections			
Pos.	Q-ty	Description	Material
70	2	Flange pipe (thread)	PE, PTFE
71	2	ANSI flange ring	PP, PTFE, AISI316L
73	2	DIN flange ring	PP, PTFE, AISI316L
701	2	Flange pipe O-ring	FEP/FKM, EPDM, NBR
712	2	JIS flange ring	PP, PTFE, AISI316L
721	2	Integrated manifold with loose flange	PP

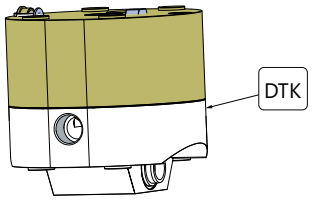

Built-on dampener			
Pos.	Q-ty	Description	Material
DTK-xxx	1	Built-on dampener assembly	-
6-xx1-112	1	Dampener housing/ pump outlet	PE, PTFE
6-xx1-12	1	Dampener centre body	PP
6-xx0-15	1	Dampener diaphragm	EPDM*, PTFE, NBR*, PTFE 1705b
6-xx0-37	12	Dampener nut	A4-70
6-xx0-38	12	Dampener washer	A4-70
6-xx0-36	3	Dampener PE seal	PE
6-xx0-47	3*/6**	Dampener O-ring	NBR, EPDM, FKM
6-xx1-16	1	Dampener shaft	AISI 316L
6-xx1-14	6	Dampener pinscrew	A4-80
6-xx1-25	1	Dampener muffler	PPM-F
6-xx1-27	1	Dampener blocking ring	PE

5. SPARE PARTS

Pressure booster – TF (left side)

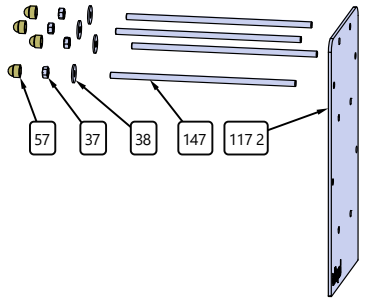

Pressure booster – TF (right side)

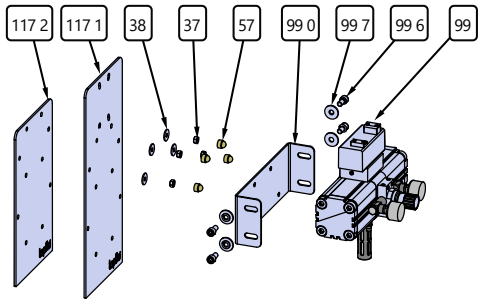

Pump with pressure booster			
Pos.	Q-ty	Description	Material
99	1	Booster	-
990	1	Booster mounting plate	AISI 304L
996	4	Booster mounting Soscrew	A4-70
997	4	Booster mounting washer	A4-80
1171	1/0***	Reinforcement plate	AISI 304L
1172	1/2***	Reinforcement plate	AISI 304L
37	6	Additional nuts	A4-70
38	6	Additional washers	A4-70
57	4	Additional nut covers	PP
147	2	Additional pin screws	A4-80

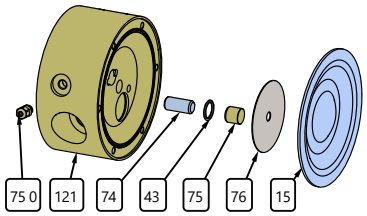

Diaphragm stroke sensor			
Pos.	Q-ty	Description	Material
121	1	Centerblock for stroke sensor	PP
43	1	O-ring	NBR, FKM, EPDM
74	1	Inductive sensor	CuZn
75	1	Sensor cap	PP
76	1	Sensing plate	AISI 316L
750	1	Cable gland	PP

* = T50 only
** = T100 only
*** = For Festo booster 2 x 1172, for SMC and Metal Work 1 x 1171 and 1 x 1

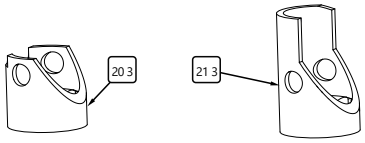

High lift seats			
Pos.	Q-ty	Description	Material
203	2	Upper sleeve – high lift	PE, PTFE
213	2	Lower sleeve – high lift	PE, PTFE

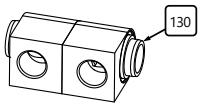

Twin connection			
Pos.	Q-ty	Description	Material
130	2	Twin in/outlet	PE, PTFE

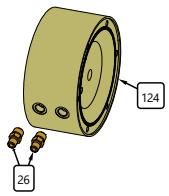

External air supply			
Pos.	Q-ty	Description	Material
124	1	Centerblock	PP
26	2	Air intake adapter	Brass

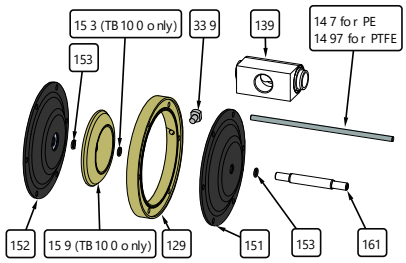

Double diaphragm system			
Pos.	Q-ty	Description	Material
129	1	Set of spacers (right + left)	PP
139	2	Long In/outlet	PE, PTFE
149	4	Pin screw for PE pump	A4-80
1497		Pin screw for PTFE pump	
151	2	Air side diaphragm	EPDM, PTFE, NBR or FKM
152	2	Liquid side diaphragm	EPDM, PTFE, NBR or FKM
153	4*/6**	Diaphragm O-ring	EPDM, FKM, NBR
159	2**	Diaphragm spacer	PP, PE, PTFE, AISI 316L
169	1	Diaphragm shaft	AISI 304L
339	2	Spacer plug	PP

5. SPARE PARTS

5.7. T200-T400 – Spare parts drawing

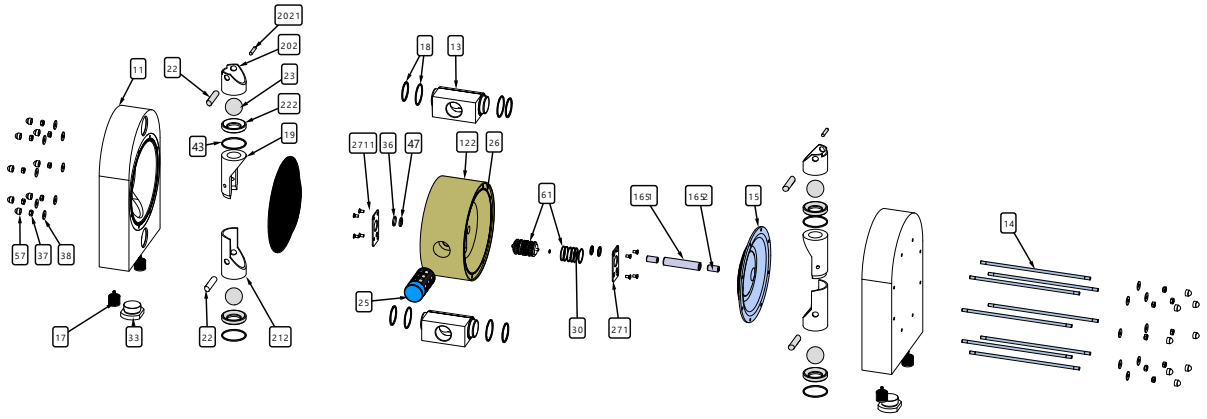

5.8. T200-T400 – Spare parts list

Pos.	Q-ty	Description	Material	KIT LIQ	KIT AIR	KIT VAL
11	2	Housing	PE, PTFE			
122	1	Centre block	PP			
13	2	In/Outlet	PE, PTFE			
14	8	Pin screw	A4-80			
15	2	Diaphragm	EPDM, PTFE, NBR, PTFE 1705b	x		
1651	1	Diaphragm shaft	AISI 304L		x	
1652	2	Grub screw	8.8 steel	x		
17	4	Rubber foot	NBR			
18	4	O-ring set (in/outlet)	PTFE/EPDM, EPDM, FKM, NBR, FEP/FKM*	x	x	
19	2	Spacer sleeve	PE, PTFE			x
202	2	Upper sleeve	PE, PTFE, AISI 316			x
2021	2	Blocking pin	PTFE, PE			x
212	2	Lower sleeve	PE, PTFE, AISI 316			x
22	4	Valve ball stop	PE1000, PTFE			x
222	4	Valve seat	PE1000, PTFE, PU, AISI 316			x
23	4	Valve ball	EPDM, PTFE, PTFE 1635 NBR, FKM, AISI 316, PU and Ceramic	x		
25	1	Muffler	Acetal/felt		x	
26	1	Air intake adapter	Brass			
271	1	Set of 2 plates	AISI 316			
2711	8	Screw	A4-70			
30	6	O-ring	NBR (standard), EPDM, FKM			
33	2	Plug	PE, PTFE			
36	2	Centerblock seal	PE		x	
37	16	Nut	A4-70			
38	16	Washer	A4-70			
43	4	O-ring (valve seat)	EPDM, PTFE, NBR, FKM	x		
47	2	O-ring (back up for 36)	NBR (standard), EPDM, FKM		x	
57	16	Nut cover	PP			
61	1	Air valve complete	Body: brass (standard), AISI 316 or PET, O-rings: NBR (standard), EPDM or FKM		x	

* = FEP/FKM standard on pumps with PTFE diaphragms from serial No 1106 .... FEP/FKM O-rings do not fit on older in/outlets (pos. 13). Older pumps have PTFE/ EPDM in std.

5. SPARE PARTS

5.9. T200-T400 – Spare parts - Options

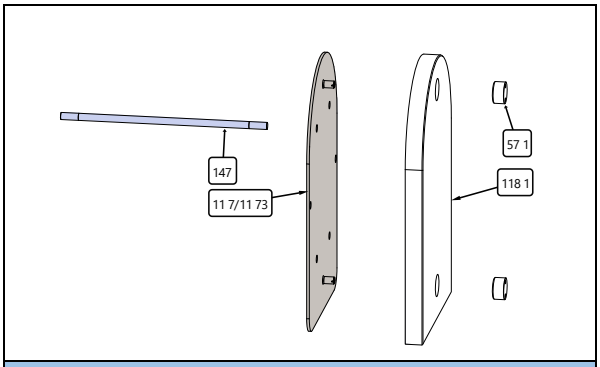

Stainless steel reinforcement (std. on ATEX PTFE)			
Pos.	Q-ty	Description	Material
117	2	Reinforcement plate	AISI 316L
147	8	Pin screw	A4-80

Stainless steel / PE reinforcement			
Pos.	Q-ty	Description	Material
1173	2	Reinforcement plate	AISI 316L
1181	2	Cover	PE
147	8	Pin screw	A4-80
571	8**/10** *	Plug	PE

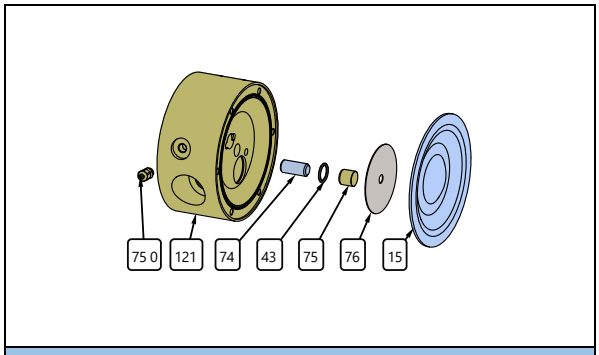

Diaphragm stroke sensor			
Pos.	Q-ty	Description	Material
121	1	Centre block for stroke sensor	PP
43	1	O-ring	NBR, FKM, EPDM
74	1	Inductive sensor	CuZn
75	1	Sensor cap	PP
76	1	Sensing plate	AISI 316L
750	1	Cable gland	PP

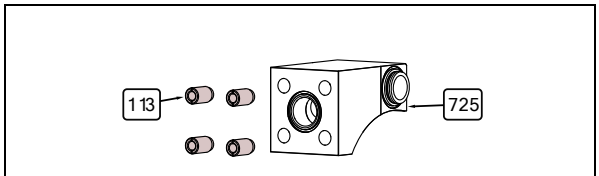

Integrated flange			
Pos.	Q-ty	Description	Material
725-2	2	DIN integrated flange	PE, PTFE
725-9	2	ANSI integrated flange	PE, PTFE
113	8	Threaded inserts	PET

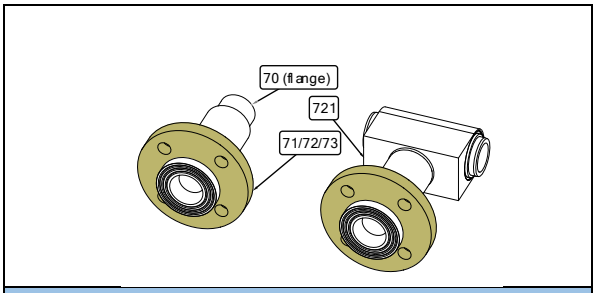

Flange connections			
Pos.	Q-ty	Description	Material
70	2	Flange pipe (thread)	PE, PTFE
71	2	ANSI flange ring	PP, PTFE, AISI316L
73	2	DIN flange ring	PP, PTFE, AISI316L
701	2	Flange pipe O-ring	FEP/FKM, EPDM, NBR
712	2	JIS flange ring	PP, PTFE, AISI316L
721	2	Integrated manifold with loose flange	PP, PTFE

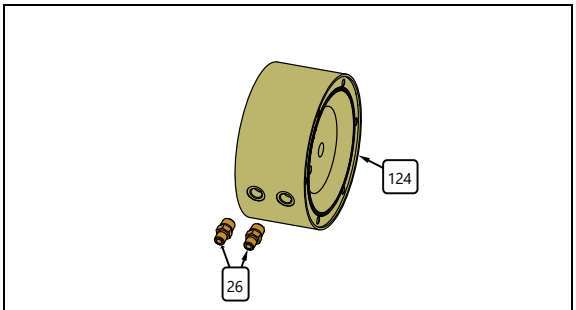

External air supply			
Pos.	Q-ty	Description	Material
124	1	Centre block	PP
26	2	Air intake adapter	Brass

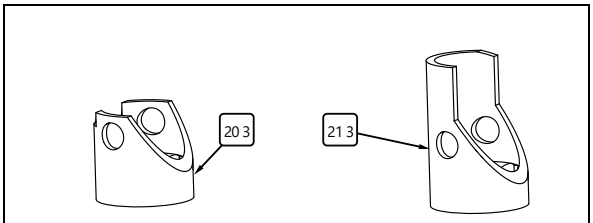

High lift seats			
Pos.	Q-ty	Description	Material
203	2	Upper sleeve – high lift	PE, PTFE
213	2	Lower sleeve – high lift	PE, PTFE

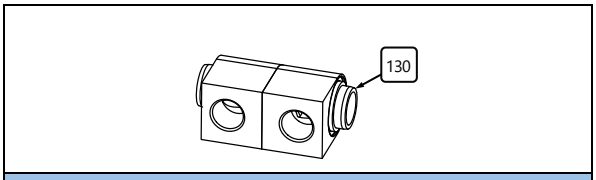

Twin connection			
Pos.	Q-ty	Description	Material
130	2	Twin in/outlet	PE, PTFE

5. SPARE PARTS

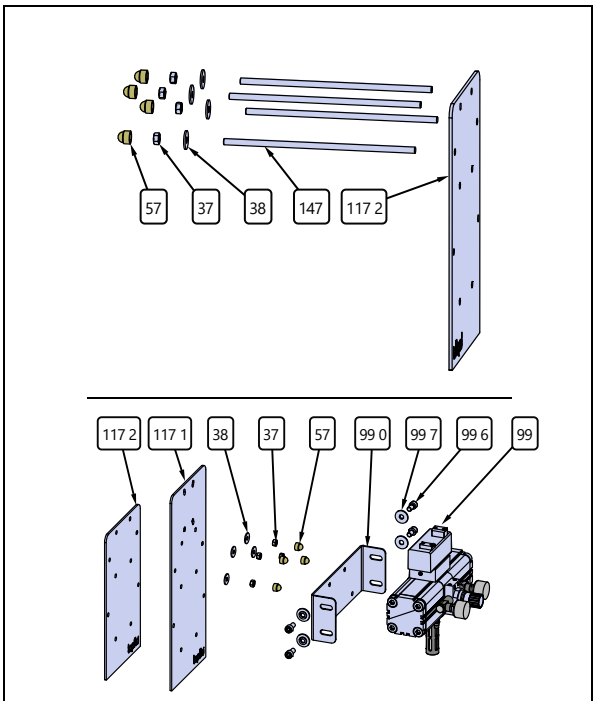

Pump with pressure booster			
Pos.	Q-ty	Description	Material
99	1	Booster	-
990	1	Booster mounting plate	AISI 304
996	4	Booster mounting screw	A4-70
997	4	Booster mounting washer	A4-80
1171	1/0*	Reinforcement plate	AISI 304
1172	1/2*	Reinforcement plate	AISI 304
37	6	Additional nuts	A4-70
38	6	Additional washers	A4-70
57	4	Additional nut covers	PP
147	2	Additional pin screws	A4-80

* = For Festo booster 2 x 1172, for SMC and Metal Work 1 x 1171 and 1 x 1172
** = T200
*** = T400

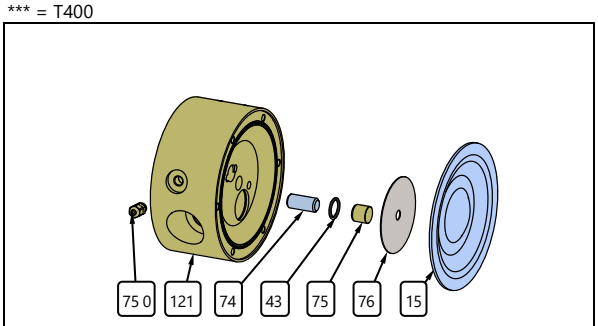

Diaphragm stroke sensor			
121	1	Centre block for stroke sensor	PP
43	1	O-ring	NBR, FKM, EPDM
74	1	Inductive sensor	CuZn
75	1	Sensor cap	PP
76	1	Sensing plate	AISI 316L
750	1	Cable gland	PP

* = Standard

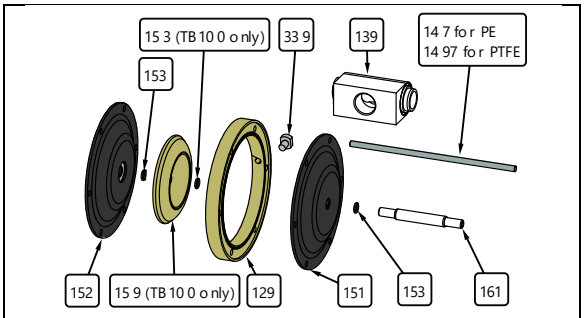

Double diaphragm system			
Pos.	Q-ty	Description	Material
129	1	Set of spacers (right + left)	PP
139	2	In/outlet	PE, PTFE
149	8	Pin screw for PE pump	A4-80
1497		Pin screw for PTFE pump	
151	2	Air side diaphragm	EPDM, PTFE, NBR or FKM
152	2	Liquid side diaphragm	EPDM, PTFE, NBR or FKM
153	6	Diaphragm O-ring	EPDM, FKM, NBR
159	2	Diaphragm spacer	PP, PE, PTFE, AISI 316L
169	1	Diaphragm shaft	AISI 304L
339	2	Spacer plug	PP

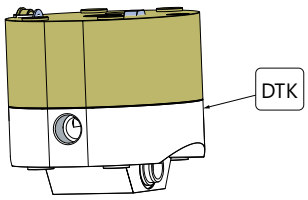

Built-on dampener (T200 only)			
Pos.	Q-ty	Description	Material
DTK-xxx	1	Built-on dampener assembly	-
6-xx1-112	1	Dampener housing/ pump outlet	PE, PTFE
6-xx1-12	1	Dampener centre body	PP
6-xx0-15	1	Dampener diaphragm	EPDM, PTFE, NBR, PTFE 1705b
6-xx0-37	16	Dampener nut	A4-70
6-xx0-38	16	Dampener washer	A4-70
6-xx0-36	3	Dampener PE seal	PE
6-xx0-47	3	Dampener O-ring	NBR, EPDM, FKM
6-xx1-16	1	Dampener shaft	AISI 316L
6-xx1-14	8	Dampener pin screw	A4-80
6-xx1-25	1	Dampener muffler	PPM-F
6-xx1-27	1	Dampener blocking ring	PE

5. SPARE PARTS

5.10. T800 – Spare parts drawing

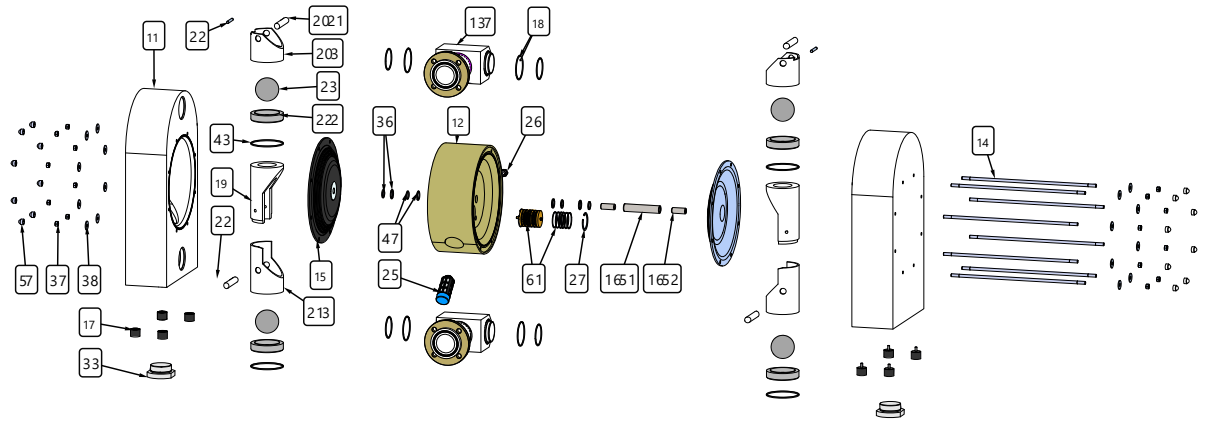

5.11. T800 – Spare parts list

Pos.	Q-ty	Description	Material	KIT LIQ	KIT AIR	KIT VAL
11	2	Housing	PE			
12	1	Centre block	PP			
137-2*	2	In/outlet integrated with DIN flange	PE			
137-9	2	In/outlet integrated with ANSI flange	PE			
137-12	2	In/outlet integrated with JIS flange	PE			
14	8	Pin screw	A4-80			
15	2	Diaphragm	EPDM, PTFE, NBR	x		
1651	1	Diaphragm shaft	AISI 316L		x	
1652	2	Grub screw	8.8 steel	x		
17	8	Rubber foot	NBR			
18	4	O-ring set (in/outlet)	PTFE/EPDM, EPDM, FKM, NBR,	x	x	
19	2	Spacer sleeve	PE			x
203	2	Upper sleeve	PE, PTFE			x
2021	2	Blocking pin	PE, PTFE			x
213	2	Lower sleeve	PE, PTFE			x
22	4	Valve ball stop	PE1000			x
222	4	Valve seat	PE1000			x
23	4	Valve ball	EPDM, PTFE, NBR, PU	x		
25	1	Muffler	Acetal/felt		x	
26	1	Air intake adapter	Brass			
27	1	Circlip	Cr3 coated steel			
30	6	O-ring	NBR (standard), EPDM, FKM			
33	2	Plug	PE, PTFE			
36	2	Centre block seal	PE		x	
37	16	Nut	A4-70			
38	16	Washer	A4-70			
43	4	O-ring (valve seat)	EPDM, PTFE, FKM	x		
47	2	O-ring (back up for 36)	NBR (standard), EPDM, FKM		x	
57	16	Nut cover	PP			
61	1	Air valve complete	Body: PET*, brass; Piston: PET*, brass; O-rings: NBR, FKM		x	
721-9	2	In/outlet integrated with ANSI flange	PE			

5. SPARE PARTS

5.12. Stocking recommendation

Even at normal operation some details in the pump will be worn. In order to avoid expensive breakdowns we recommend having a few spare parts in stock.

Depending on the severity of the operation and the importance of assuring continuous work we offer three different spare part ***KITS*** – ***KIT LIQ*** and ***KIT VAL*** includes parts on pump wetted side, ***KIT AIR*** includes parts on the pump air side and that are subject to wear.

TR9 and TR20:

	Pos.	Description	Q-ty
KIT LIQ	15	Diaphragm	2
	18	O-ring set in/outlet	4
	20	Lower rod	2
	21	Upper rod	2
	22	Pin	2

	Pos.	Description	Q-ty
KIT AIR	18	O-ring set in/outlet	4
	61	Air valve complete	1
	25	Muffler	1

T50, T100, T200, T400 and T800:

	Pos.	Description	Q-ty
KIT AIR	18	O-ring set in/outlet	4
	61	Air valve complete	1
	1651	Diaphragm shaft	1
	36	Centre block seal	2
	47	O-ring(back up for 36)	2/4*
	25	Muffler	1

	Pos.	Description	Q-ty
KIT LIQ	15	Diaphragm	2
	1652	Grub screw	2
	18	O-ring set in/outlet	4
	23	Valve ball	4
	43	O-ring (valve seat)	4

	Pos.	Description	Q-ty
KIT VAL	19	Spacer sleeve	2
	2021	Blocking pin	2
	202	Upper sleeve	2
	212	Lower sleeve	2
	222	Valve seat	4
	22	Valve ball stop	4

* **2** for T50, T200, T400, T800 / **4** for T100 pump

5. SPARE PARTS

5.13. How to order parts

When ordering spare parts for Tapflo pumps, please let us know what is the ***model number*** and ***serial number*** from the pump centre body or housing. Then just indicate the part numbers from the spare parts list and quantity of each item.

5.14. Pump code

The model number on the pump and on the front page of this instruction manual tells the pump size and materials of the pump.

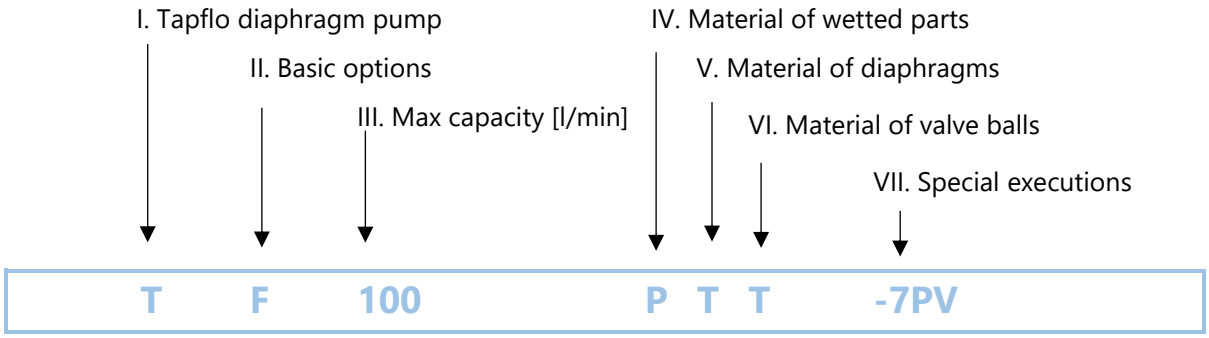

I. T = Tapflo diaphragm pump

II. Basic options:
- B = Backup diaphragm pump
- C = Pump with LEAP technology
- D = Drum pump
- F = Filter-press pump
- K = Pump with built-on dampener (TR20 – T200)
- Q = Special sealed pump
- R = Rod valve pump (instead of balls)
- S = Spring valve pumps
- T = Twin inlet/outlet pump
- V = AISI316 valve seats / spacer
- X = ATEX approved, group II, cat. 2
- Y = High lift valve seats
- Z = ATEX approved, group II, cat. 1

IV. Material of wetted parts:
- P = PE
- T = PTFE
- L = PP

V. Material of diaphragms:
- E = EPDM
- W = White (food grade) EPDM
- N = NBR (nitrile rubber)
- T = PTFE
- Z = PTFE with white back (food grade)
- B = PTFE TFM 1705b
- V = FKM

VI. Material of valve balls:
- E = EPDM
- N = NBR (nitrile rubber)
- T = PTFE
- S = AISI 316 stainless steel
- U = PU (polyurethane)
- K = Ceramic
- V = FKM
- B = PTFE TFM 1635

Material of rod valves (TR9 and TR20 only):
- T = PTFE

VII. Special executions:
- 1 = Optional material of in/outlet
- 2 = Optional material of valve seat insert
- 3 = Optional connection type
- 4 = Backup diaphragm system configuration
- 5 = Other special executions
- 6 = Optional material of centre body
- 7 = Optional material of air valve
- 8 = Optional material of pos. 18 seals
- 9 = Optional material of housing pin screws
- 11 = Housing reinforcement plate options
- 13 = Twin in-/outlet options
- 14 = Optional pump feet
- 17 = Plates for pump/dampener assembly
- 18 = Special ATEX executions
- 19 = TF pump options
- 20 = Optional material of valve seat/sleeves

6. DATA

6.1. Capacity curves

The performance curves are based on water at 20°C.Other circumstances might change the performance. See below how the capacity will change at different viscosities and suction lifts.

Example:

A flow of 30 litre/minute is desired. The discharge pressure is calculated to 30 mWC. We choose a T50 pump. It requires an air pressure of 6 bar and will consume approximately 0.25 Nm^3 of air per minute.

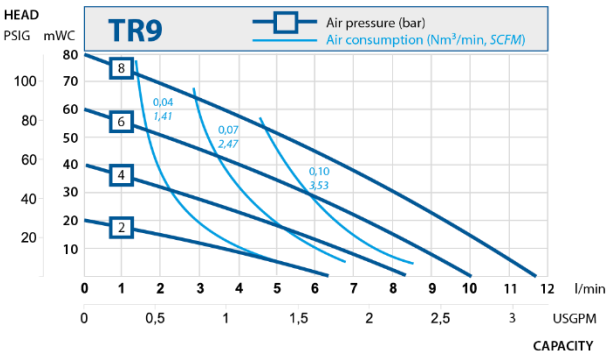

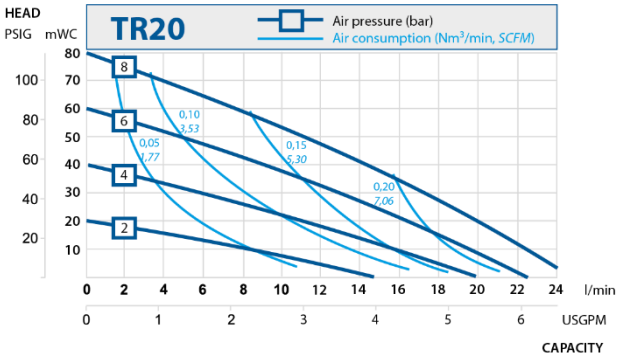

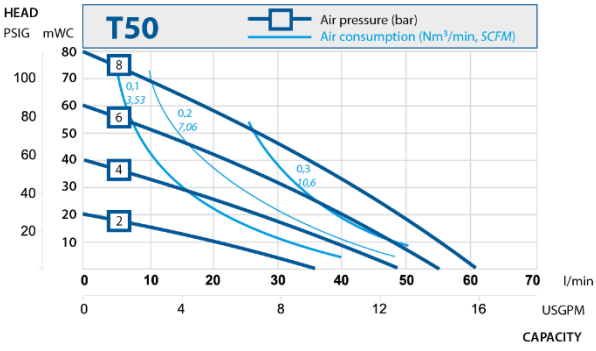

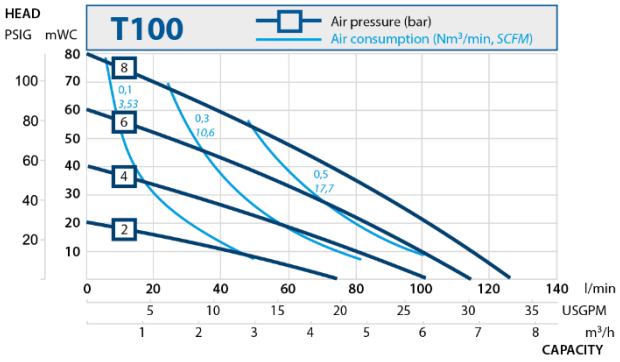

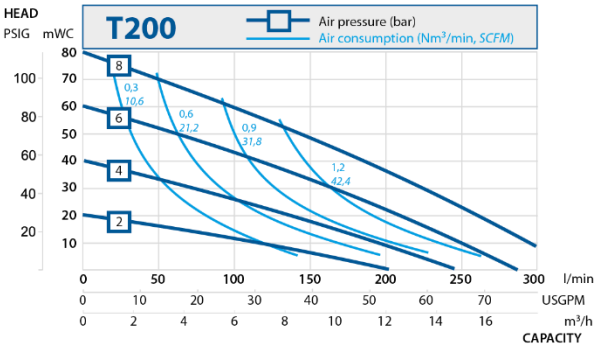

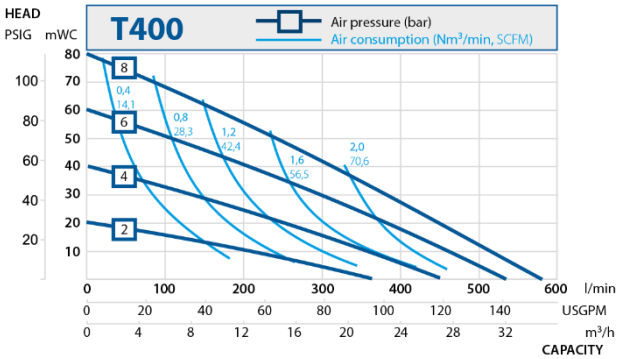

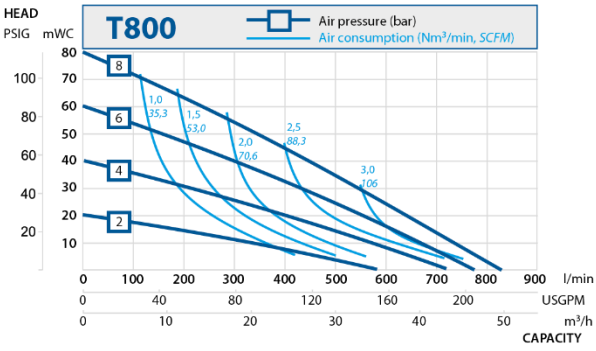

Recommended flow is half of the max flow, e.g. recommended flow for a T50 is 25 l/min.

6. DATA

6.2. Capacity changes

Capacity changes at different suction lifts

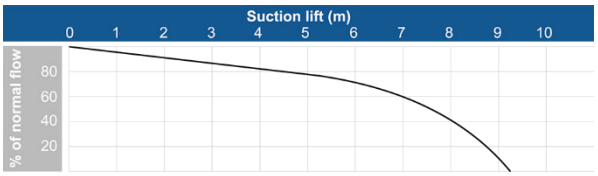

Capacity changes at different viscosities

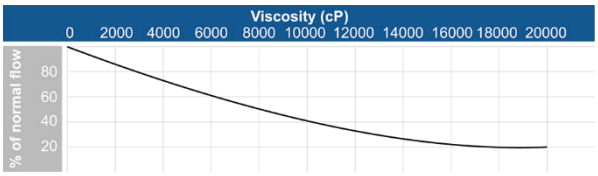

6.3. Technical data

TECHNICAL DATA	PUMP SIZE						
	TR9	TR20	T50	T100	T200	T400	T800
Max capacity* [l/min] / [US GPM]	11 / 2.9	24 / 6.3	60 / 15.8	125 / 33	330 / 87	570 / 150	820 / 216
Volume per stroke** [ml] / [cu in]	15 / 0.92	26 / 1.59	116 / 7.08	305 / 18.6	854 / 52.1	2326 / 141.9	5240 / 319.8
Max discharge pressure [bar] / [psi]	8 / 116	8 / 116	8 / 116	8 / 116	8 / 116	8 / 116	8 / 116
Max air pressure [bar] / [psi]	8 / 116	8 / 116	8 / 116	8 / 116	8 / 116	8 / 116	8 / 116
Max suction lift dry*** [m] / [Ft]	1.6 / 5.25	2.4 / 7.87	4 / 13	3.5 / 11	4 / 13	4 / 13	5 / 16
Max suction lift wet [m] / [Ft]	8 / 26	8 / 26	9 / 29.5	9 / 29.5	9 / 29.5	9 / 29.5	9 / 29.5
Max size of solids ø in [mm] / [in]	2 / 0.08	3 / 0.12	4 / 0.16	6 / 0.24	10 / 0.39	15 / 0.59	15 / 0.59
Max temp. pump in PE [°C] / [°F]	70 / 158	70 / 158	70 / 158	70 / 158	70 / 158	70 / 158	70 / 158
Max temp. pump in PTFE [°C] / [°F]	100 / 212	100 / 212	100 / 212	100 / 212	100 / 212	100 / 212	-
Weight of pump in PE [kg] / [lb]	0.75 / 1.65	1.6 / 3.53	4.3 / 9.48	10 / 22	25 / 55.12	47 / 103.62	147 / 342
Weight of pump in PTFE [kg] / [lb]	1.35 / 2.98	3.15 / 6.94	9 / 19.84	17 / 38	47 / 103.62	87 / 191,80	-
Weight of drum pump in PE [kg] / [lb]	-	2.4 / 5.29	4.7 / 10.36	10.5 / 23.15	-	-	-
Weight of drum pump in PTFE[kg]/[lb]	-	3.9 / 8,6	9.4 / 20.72	17.5 / 38.58	-	-	-
Standard connection in PE pumps	BSP female thread (G)						DIN flange
Standard connection in PTFE pumps	BSP female thread (G)						-

* = Recommended flow is half of the max flow, i.e. recommended flow for a T50 is 25 l/min (6.6 US GPM)

** = Based on pumps with PTFE diaphragms. Pumps with rubber diaphragms have higher volume per stroke.

*** = With stainless steel valve balls, other materials may reduce suction. Please consult us in this matter.

COMPONENT	MATERIAL
Pump housing and all wetted thermoplastic elements	PE, PTFE (except T800)
Centre block (not wetted)	PP, PP conductive, PE1000 conductive
Diaphragms	PTFE, PTFE with white back, EPDM, white EPDM, NBR, FKM
Valve balls	PTFE, EPDM, NBR, AISI 316*, PU, Ceramic*, SiC*
Rod valves (TR9 and TR20)	PE, PTFE
Air valve	Body: brass (std.), stainless steel AISI 316L or PET O-rings: NBR (std.), EPDM or FKM
O-rings (wetted)	PTFE, EPDM, FKM, FEP/Silicone, FEP/FKM, NBR
Housing pin screws	A4-80
Diaphragm shaft	Stainless steel AISI 316L (TR9, TR20, T800) / 304L (T50 – T400)
Grub screws	8.8. steel
Drum handle (TD pumps)	Stainless steel AISI 316L
Drum pipe (TD pumps)	Stainless steel AISI 316L, PP, PTFE, PTFE conductive
Reinforcement plates (TF, PTFE pumps)	Stainless steel AISI 304, AISI 316L

* = Not available for T800

6. DATA

6.4. Dimensions

General dimensions only, ask us for detailed drawings. Changes reserved without notice.

Dim	PUMP SIZE						
	TR9	TR20	T50	T100	T200	T400	T800
A	70	105	150	200	270	350	460
	2.76	4.13	5.91	7.87	10.63	13.78	18.11
A2	-	-	150	200	270	350	-
	-	-	5.91	7.87	10.63	13.78	-
B	94	113	162	216	313	398	557
	3.70	4.45	6.38	8.50	12.32	15.67	21.93
B2	-	-	168	224	324	408	-
	-	-	6.61	8.82	12.76	16.06	-
B3	-	-	262	415	595	686	-
	-	-	10.31	16.34	23.43	27.01	-
B4	134	152	200	254	350	420	-
	5.28	5.98	7.87	10.00	13.78	16.54	-
C	116	134	185	252	350	442	601
	4.57	5.28	7.28	9.92	13.78	17.40	23.66
D	123	168	243	320	450	563	830
	4.84	6.61	9.57	12.60	17.72	22.17	32.68
D2	-	175	250	325	-	-	-
	-	6.89	9.84	12.80	-	-	-
D3	-	-	352	351	501	583	-
	-	-	13.86	13.82	19.72	22.95	-
D4	-	-	343	364	500	610	-
	-	-	13.50	14.33	19.69	24.02	-
E	92	132	190	252	345	440	650
	3.62	5.20	7.48	9.92	13.58	17.32	25.59
E2	-	147	210	280	-	-	-
	-	5.79	8.27	11.02	-	-	-
E3	-	-	250	333	467	588	-
	-	-	9.84	13.11	18.39	23.15	-
F	8	8	15	15	30	30	30
	0.31	0.31	0.59	0.59	1.18	1.18	1.18
F2	-	15	21	21	-	-	-
	-	0.59	0.83	0.83	-	-	-
G	9	15	17	30	30	30	20
	0.35	0.59	0.67	1.18	1.18	1.18	0.79
H	10	15	16	30	30	30	30
	0.39	0.59	0.63	1.18	1.18	1.18	1.18
H2	-	-	19	34	35	35	-
	-	-	0.75	1.34	1.38	1.38	-
H3	30	35	36	50	50	50	-
	1.18	1.38	1.42	1.97	1.97	1.97	-
I	12	15	20	28	38	48	80
	0.47	0.59	0.79	1.10	1.50	1.89	3.15
J	¼"	3/8"	½"	1"	1 ½"	2"	3"
	¼"	3/8"	½"	1"	1 ½"	2"	3"
J2	¼"	3/8"	½"	¾"	-	-	-
	¼"	3/8"	½"	¾"	-	-	-
K	M4x16	M4x16	M8x25	M8x25	M8x25	M8x25	M8x25
	M4	M4	M8	M8	M8	M8	M8
L	1/8"	1/8"	¼"	¼"	½"	½"	½"
	1/8"	1/8"	¼"	¼"	½"	½"	1/2""
M	15	17	25	38	54	70	105
	0.59	0.67	0.98	1.50	2.13	2.76	4.13
N	58	81	115	154	211	268	411
	2.28	3.19	4.53	6.06	8.31	10.55	16.18
P	35	52	80	105	143	183	237
	1.38	2.05	3.15	4.13	5.63	7.20	9.33
R	0°	0°	15°	15°	0°	0°	0°
	0°	0°	15°	15°	0°	0°	0°
S	13	15	21	27	35	42	-
	0.51	0.59	0.83	1.06	1.38	1.65	-
ØT	-	20	32	32	-	-	-
	-	0.79	1.26	1.26	-	-	-
U	-	1200*	1200*	1200*	-	-	-
	-	47.24*	47.24*	47.24*	-	-	-
V	-	286	360	401	-	-	-
	-	11.22	14.17	15.57	-	-	-

Standard PE pumps

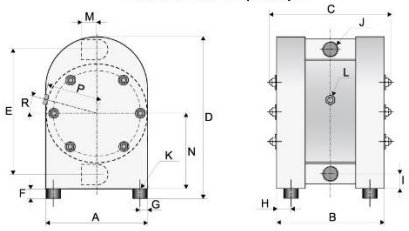

Standard PTFE pumps

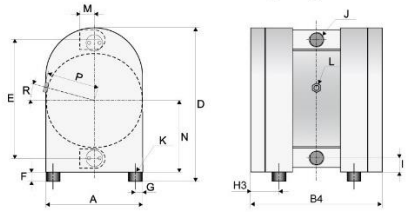

Drum pumps TD

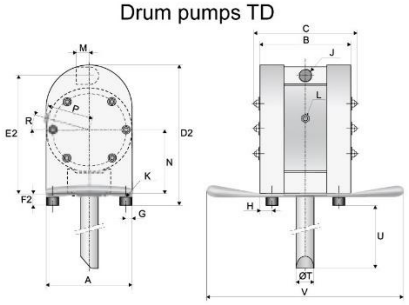

Twin pumps TT

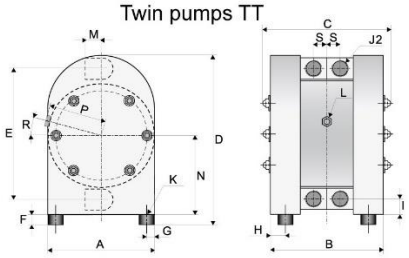

Filterpress pumps TF

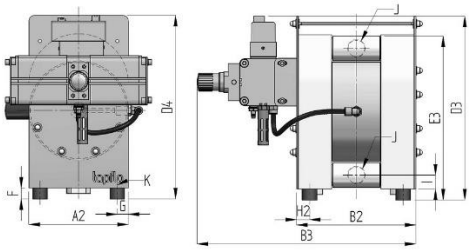

Changes reserved without notice

Dimensions in mm (where other is not indicated)
Dimensions in inch (where other is not indicated)

* = Any length up to 2000 mm (79") upon request

6. DATA

Dim		PUMP SIZE								
		Integrated flanges					Built-on dampener			
		TR20	T50	T100	T200	T400	TR20	T50	T100	T200
B		114	162	216	314	398	112,5	162	216	310
		4.49	6.38	8.50	12.36	15.67	4.43	6.38	8.50	12.20
C		135	185	252	352	442	134	185	252	345
		5.31	7.28	9.92	13.86	17.40	5.28	7.28	9.92	13.60
D		202	244	320	450	564	251	350	461	649
		7.95	9.61	12.60	17.72	22.20	9.88	13.78	18.15	25.60
E		97	140	204	282	372	158	223	299,5	496
		3.82	5.51	8.03	11.10	14.65	6.22	8.78	11.79	19.50
F		30	15	15	30	30	8	15	15	30
		1.18	0.59	0.59	1.18	1.18	0.31	0.59	0.59	1.20
G		75	116	140	210	290	75	116	140	210
		2.95	4.57	5.51	8.27	11.42	2.95	4.57	5.51	8.30
H		84	130	156	254	322	82,5	130	156	250
		3.31	5.12	6.14	10.00	12.68	3.25	5.12	6.14	9.80
I		68	60	67	99,5	112	23	35	43	68
		2.68	2.36	2.64	3.92	4.41	0.91	1.38	1.69	2.70
J	DIN	DN10	DN15	DN25	DN40	DN50	DN10	DN15	DN25	DN40
	ANSI	½	½	1	1 ½	2	3/8	½	1	1 ½
K		30	30	30	40	40	15	30	30	40
		1.18	1.18	1.18	1.57	1.57	0.59	1.18	1.18	1.60
L		1/8"	¼"	¼"	½"	½"	1/8"	¼"	¼"	½"
		1/8	¼	¼	½	½	1/8	¼	¼	½
M		90	100	135	150	175	17	25	38	54
		3.54	3.94	5.31	5.91	6.89	0.67	0.98	1.50	2.10
M2		-	-	-	-	-	53,5	77,5	101,5	135
		-	-	-	-	-	2.11	3.05	4.00	5.30
N		116	151	197	241	298	89	151	196,5	241
		4.57	5.94	7.76	9.49	11.73	3.50	5.94	7.74	9.50
P		143	180	240	341	389	134	172	236	342
		5.63	7.09	9.45	13.43	15.31	5.28	6.77	9.29	13.5
R		0°	15°	15°	0°	0°	0°	15°	15°	0°
		-	-	-	-	-	-	-	-	-
S	DIN	60	65	85	110	125	-	-	-	-
	ANSI	60.3	60.3	79.4	98.4	120.6	-	-	-	-
T		M12	M12	M12	M16	M16	-	-	-	-
		-	-	-	-	-	-	-	-	-
U		30	30	30	45	45	-	-	-	-
		1.18	1.18	1.18	1.77	1.77	-	-	-	-

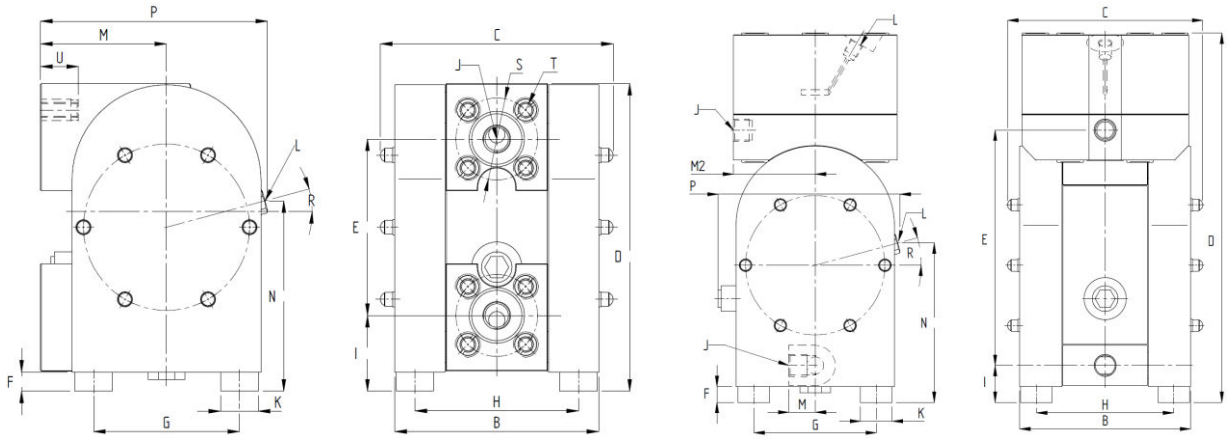

6. DATA

6.5. Tightening torques

Checking of the tightening torques is necessary after periods of stoppage, when temperature variations are a factor or after transport and maintenance of the pump.

What is more for proper operation and safety the torque values should be checked frequently as part of preventive maintenance (contact Tapflo for interval proposals). Although pump applications vary, a general guideline is to re-torque pos. 37 every two weeks.

	Tightening torques [Nm]						
Pump size	TR9	TR20	T50	T100	T200	T400	T800
Pos. 37 – nut	1.5	5	8	16	20	23	30
Pos. 1652 – diaphragm screw	n/a	n/a	10	13	20	22	26
Pos. 2711 – air valve plate screw	n/a	n/a	n/a	11,5	11,5	11,5	11,5

6.6. Permitted loads on manifolds

We recommend not to exceed the following loads and forces reacting on the manifolds.

TR9		
Direction	**Load [N] (inlet/outlet)**	**Moment of force (inlet/outlet) [Nm]**
X	20	3,5
Y	20	3,5
Z	20	3,5

TR20		
Direction	**Load [N] (inlet/outlet)**	**Moment of force (inlet/outlet) [Nm]**
X	27	4,2
Y	27	4,2
Z	27	4,2

T50		
Direction	**Load [N] (inlet/outlet)**	**Moment of force (inlet/outlet) [Nm]**
X	31	5,3
Y	31	5,3
Z	31	5,3

T100		
Direction	**Load [N] (inlet/outlet)**	**Moment of force (inlet/outlet) [Nm]**
X	35	6,1
Y	35	6,1
Z	35	6,1

T200		
Direction	**Load [N] (inlet/outlet)**	**Moment of force (inlet/outlet) [Nm]**
X	43	7,4
Y	43	7,4
Z	43	7,4

T400		
Direction	**Load [N] (inlet/outlet)**	**Moment of force (inlet/outlet) [Nm]**
X	56	9,6
Y	56	9,6
Z	56	9,6

T800		
Direction	**Load [N] (inlet/outlet)**	**Moment of force (inlet/outlet) [Nm]**
X	83	11
Y	83	11
Z	83	11

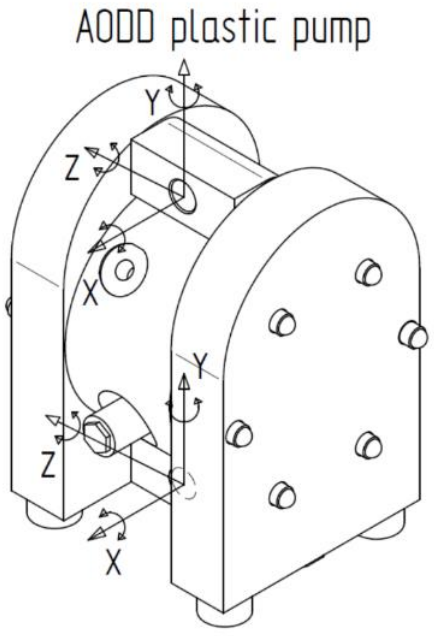

7. WARRANTY

7.1. Warranty form

Company:

Telephone: Fax:

Address:

Country: Contact Name:

E-mail:

Delivery Date: Date of pump installation:

Pump type:

Serial No (see name plate or stamped on pump housing):

Description of the fault:

The installation:

Liquid:

Temperature [°C]: Viscosity [cPs]: Spec grav. [kg/m^3]: pH-value:

Content of particles: %, of max size [mm]:

Flow [l/min]: Duty [h/day]: No of starts per day:

Discharge head [mWC]: Suction head / lift [m]:

Air pressure [bar]: Quality of the air (filter, micron, lubrication):

Other:

Place for sketch of installation:

7. WARRANTY

7.2. Returning parts

When returning parts to Tapflo please follow this procedure:

- Consult Tapflo for shipping instructions.
- Cleanse or neutralize and rinse the part/pump. Make sure the part/pump is completely empty from liquid.
- Pack the return articles carefully to prevent any damage during transportation.

Goods will not be accepted unless the above procedure has been complied with.

7.3. Warranty

Tapflo warrants products under conditions as stated below for a period of not more than 5 years from installation and not more than 6 years from date of manufacturing.

1. The following terms and conditions apply to the sale of machinery, components and related services and products, of Tapflo (hereinafter "the products").

2. Tapflo (the manufacturer) warrants that:

   a. its products are free of defects in material, design and workmanship at the time of original purchase;
   b. its products will function in accordance with Tapflo operative manuals; Tapflo does not guarantee that the product will meet the precise needs of the Customer, except for those purposes set out in any invitation to render documents or other documents specifically made available to Tapflo before entering into this agreement;
   c. high quality materials are used in the construction of the pumps and that machining and assembly are carried out to the highest standards.

   Except as expressly stated above, Tapflo makes no warranties, express or implied, concerning the products, including all warranties of fitness for a particular purpose.

3. This warranty shall not be applicable in circumstances other than defects in material, design, and workmanship. In particular warranty shall not cover the following:

   a. Periodic checks, maintenance, repair and replacement of parts due to normal wear and tear (seals, O-rings, rubber items, diaphragms, air valves etc..);
   b. Damage to the product resulting from:
      b.1. Tampering with, abuse or misuse, including but not limited to failure to use the product for its normal purposes as stated at the time of purchase or in accordance with Tapflo instructions for use and maintenance of the product, or the installation or improper ventilation or use of the product in a manner inconsistent with the technical or safety standard in force;
      b.2. Repairs performed by non-skilled personnel or use of non-original Tapflo parts;
      b.3. Accidents or any cause beyond the control of Tapflo, including but not limited to lightning, water, fire, earthquake, and public disturbances, etc.;
4. The warrantee shall cover the replacement or repairing of any parts, which is documented faulty due to construction or assembling, with new or repaired parts free of charges

delivered by Tapflo. Parts subjected to normal tear and wear shall not be covered by the warranty. Tapflo shall decide as to whether the defective or faulty part shall be replaced or repaired.

5. The warrantee of the products shall be valid for a period in accordance to the current law from the date of delivery, under the condition that notice of the alleged defect to the products or parts thereof be given to Tapflo in written within the mandatory term of 8 days from the discovery. Repair or replacement under the terms of this warranty shall not give a right to an extension to, or a new commencement of, the period of warranty.

6. Repair or replacement under the terms of this warranty shall not give a right to an extension to, or a new commencement of, the period of warranty. Repair or replacement under the terms of this warranty may be fulfilled with functionally equivalent reconditioned units. Tapflo qualified personnel shall be solely entitled to carry out repair or replacement of faulty parts after careful examination of the pump. Replaced faulty parts or components will become the property of Tapflo.

7. The products are built in accordance with standard CE normative and are tested (where applicable) by Tapflo. Approval and tests by other control authority are for the customer's account. The products shall not be considered defective in materials, design or workmanship if they need to be adapted, changed or adjusted to conform to national or local technical or safety standards in force in any country other than that for which the unit was originally designed and manufactured. This warranty shall not reimburse such adaptations, changes or adjustments, or attempt to do so, whether properly performed or not, nor any damage resulting from them, nor any adaptation, change or adjustments to upgrade the products from their normal purpose as described in the products operative manual without the prior written consent of Tapflo.

8. Installation, including electric and other connections to utility mains according to Tapflo drawings, is for the cost and responsibility of the customer, unless otherwise agreed in writing.

9. Tapflo will not be liable on any claim, whether in contact, tort, or otherwise, for any indirect, special, incidental, or consequential damages, caused to the customer or to third parties, including loss of profits, arising by any possible infringement of par. 3 above or by the customer or third parties being in the impossibility of using the products.

Steady the above, Tapflo liability to the customer or third parties from any claim, whether in contract, tort, or otherwise, shall be limited to the total amount paid by the customer for the product that caused the damages.

TAPFLO AB

Sweden

Filaregatan 4 | S-442 34 Kungälv

Tel: +46 303 63390
Fax: +46 303 19916

E-mail addresses:
Commercial questions: sales@tapflo.com
Orders: order@tapflo.com
Tech support: support@tapflo.com

Tapflo products and services are available worldwide.

Tapflo is represented by own Tapflo Group Companies and carefully selected distributors assuring highest Tapflo service quality for our customers' convenience.

AUSTRALIA | AUSTRIA | AZERBAIJAN | BAHRAIN | BELGIUM | BOSNIA & HERZEGOVINA | BRAZIL | BULGARIA | CANADA | CHILE | CHINA | COLOMBIA | CROATIA | CZECH REPUBLIC | DENMARK | ECUADOR | EGYPT | ESTONIA | FINLAND | FRANCE | GEORGIA | GERMANY | GREECE | HONG-KONG | HUNGARY | ICELAND | INDIA | INDONESIA | IRELAND | ISRAEL | ITALY | JAPAN | JORDAN | KAZAKHSTAN | KUWAIT | LATVIA | LIBYA | LITHUANIA | MACEDONIA | MALAYSIA | MEXICO | MONTENEGRO | MOROCCO | NETHERLANDS | NEW ZEALAND | NORWAY | POLAND | PORTUGAL | PHILIPPINES | QATAR | ROMANIA | SAUDI ARABIA | SERBIA | SINGAPORE | SLOVAKIA | SLOVENIA | SOUTH AFRICA | SOUTH KOREA | SPAIN | SWEDEN | SWITZERLAND | TAIWAN | THAILAND | TURKEY | UKRAINE | UNITED ARAB EMIRATES | UNITED KINGDOM | USA | UZBEKISTAN | VIETNAM

Tapflo Group Companies

Australia
Tapflo Oceania (Pty) Ltd.
Tel: +61 1800303633
sales@tapflo.com.au

Austria
Tapflo GmbH
Tel: +43 73227292910
sales@tapflo.at

Baltic States
Tapflo SIA
Tel: +371 67472205
sales@tapflo.lv

Belgium
Tapflo Benelux B.V.
Tel: +31 (0)850074300
info@tapflo.nl

Bulgaria
Tapflo EOOD
Tel: +359 (0)29741854
office@tapflo.bg

Canada
Tapflo Canada
Tel: +1 5148135754
canada@tapflo.com

China
Tapflo (Wuxi) Pumps Co. Ltd.
Tel: +86 51082417072
sales@tapflo.cn

Croatia
Tapflo d.o.o.
Tel: +385 914884666
sales@tapflo.hr

Czech Republic
Tapflo s.r.o.
Tel: +420 513033924
tapflo@tapflo.cz

Denmark
Tapflo Danmark ApS
Tel: +45 36454600
info@tapflo.dk

France
Sarl Tapflo France
Tel: +33 134788240
info@tapflo.fr

Hungary
Tapflo Kft.
Tel: +36 30148 8551
office@tapflo.hu

India
Tapflo Fluid Handling India Pvt Ltd.
Tel: +91 2065000215
ac@tapflo.in

Ireland
Tapflo Ireland Ltd.
Tel: +353 12011911
info@tapflo.ie

Italy
Tapflo Italia S.r.l.
Tel: +39 0362306528
info@tapfloitalia.com

Japan
Tapflo Japan K.K.
Tel: +81 362403510
tapflojp@tapflo.co.jp

Kazakhstan
Tapflo LLP
Tel: +7 7273278347
sales@tapflo.kz

Netherlands
Tapflo Benelux B.V.
Tel: +31 (0)850074300
info@tapflo.nl

Poland
Tapflo Sp. z o.o.
Tel: +48 585304212
info@tapflo.pl

Romania
S.C. Tapflo Rom. S.r.l.
Tel: +40 213451255
sales@tapflo.ro

Serbia
Tapflo d.o.o.
Tel: +381 21445808
sales@tapflo.rs

Slovakia
Tapflo s.r.o.
Tel: +421 911137883
tapflo@tapflo.sk

Slovenia
Tapflo d.o.o.
Tel: +386 68613474
sales@tapflo.hr

Spain
Tapflo Ibérica S.L.
Tel: +34 918093182
avives@tapfloiberica.es

South Africa
Tapflo (Pty) Ltd.
Tel: +27 317015255
sales@tapflo.co.za

Sweden
Tapflo AB
Tel: +46 (0)30314050
info@tapflo.com

Turkey
Tapflo Makina Ltd.
Tel: +90 2164673311
sales@tapflo.com.tr

Ukraine
Tapflo LLC
Tel: +380 442226844
sales@tapflo.ua

Uzbekistan
Tapflo Uzbekistan
Tel: +998 712370940
sales@tapflo.uz

United Kingdom
Tapflo (UK) Ltd.
Tel: +44 2380252325
sales@tapflopumps.co.uk

If your country is not listed please visit www.tapflo.com/en/contact

www.tapflo.com

Tapflo is a registered trademark of Tapflo AB. All rights reserved.

Information in this document is subject to change without notice. Reproduction in any manner without written permission of Tapflo Group is forbidden. Tapflo Group reserves the right to make changes in product design, or detail, and to discontinue any product or material without notice.