IOM manual

tapflo®

Powder Diaphragm Pumps

Original Instruction
2020 | 1

Read this instruction manual carefully, before you install and operate the pump.

CE

Pump models:

TXP70

TXP120

TXP220

TXP420

TXP820



All about your flow™

www.tapflo.com

CONTENTS

EC DECLARATION OF CONFORMITY 01/EC/TP/2019 4

EU DECLARATION OF CONFORMITY 01/ATEX/AODD/2020 5

0. GENERAL 6

0.1. Introduction 6

0.2. Warning symbols 6

0.3. Qualification and training of personnel 6

1. INSTALLATION 7

1.1. Operation principle 7

1.2. Receiving inspection 8

1.3. Lifting and transportation 8

1.4. Storage 8

1.5. Foundation 8

1.6. Suction and discharge piping 9

1.6.1. Rotary connections 9

1.6.2. Connection of suction pipe 9

1.6.3. Connection of discharge pipe 9

1.7. Health and safety 9

1.7.1. Protection 9

1.7.2. Explosion hazardous environments – ATEX 10

1.7.3. Air pressure 10

1.7.4. Noise level 11

1.7.5. Temperature hazards 11

1.8. Air connection 11

1.8.1. Air treatment system 11

1.9. Example of installation 12

1.10. Recommended installation 12

2. OPERATION 13

2.1. Before starting the pump 13

2.2. Starting and operation 13

2.2.1. Dry running 13

2.2.2. Optimization of the pump lifetime 14

2.3. Pump stopping 14

2.4. Residual risks 14

2.5. Disposal after expiration of the life expectancy 15

2.6. Actions in an emergency 15

CONTENTS

3. MAINTENANCE 16
3.1. When the pump is new or reassembled 16
3.1.1. Performance test 16
3.2. Routine inspection 16
3.3. Complete inspection 16
3.4. Location of faults 17
3.5. Disassembly of the pump 18
3.5.1. Before the disassembly procedure 18
3.5.2. Disassembly procedure 18
3.6. Assembly of the pump 20
3.6.1. Test run 21
4. OPTIONS 22
4.1. Powder pump without air injection system – 12HT 22
4.2. Air injection system on upper and lower seats – 12AI 22
4.3. Stainless steel pump – industrial and hygienic 23
5. SPARE PARTS 24
5.1. Spare parts drawing 24
5.2. Spare parts list 24
5.3. Stocking recommendation 25
5.4. How to order parts 25
5.5. Pump code 26
6. DATA 27
6.1. Capacity curves 27
6.2. Technical data 27
6.3. Tightening torques 27
6.4. Dimensions 28
6.5. Permitted loads on manifolds 29
7. WARRANTY 30
7.1. Warranty form 30
7.2. Returning parts 31
7.3. Warranty 31

EC DECLARATION OF CONFORMITY 01/EC/TP/2019

Series:

T(…)P70…;T(…)P120…; T(…)P220…; T(…)P420…; T(…)P820…;

Serial numbers:

From 1301-…

Manufactured by:

Tapflo AB
Filaregatan 4
442 34 Kungälv, Sweden

This declaration of conformity is issued under the sole responsibility of the manufacturer.

Object of declaration: **AIR OPERATED DIAPHRAGM POWDER PUMPS**

The object of the declaration described above is in conformity with the relevant Union harmonisation legislation:

- Directive 2006/42/EC of European Parliament and of the Council of 17 May 2006 on machinery, amending Directive 95/16/EC;

Mr Michał Śmigiel is authorized to compile the technical file.

Tapflo Sp. z o.o.
ul. Czatkowska 4b
83-110 Tczew

Signed for and on behalf of Tapflo AB

Håkan Ekstrand
Managing director
Tapflo AB, 14.01.2019 r.

EU DECLARATION OF CONFORMITY 01/ATEX/AODD/2020

Series:
TX(...)9...; TX(...)20...; TX(...)50...; TX(...)100...; TX(...)200...; TX(...)400...; TX(...)800...;
TX(...)25...; TX(...)70...; TX(...)120...; TX(...)220...; TX(...)420...; TX(...)820...;
TX(...)30...; TX(...)80...; TX(...)125...; TX(...)225...; TX(...)425...; TX(...)825...;
TX(...)94...; TX(...)144...; TX(...)244...; TX(...)444...;

Serial numbers: **from: 1911-...**

Manufactured by:
Tapflo AB
Filaregatan 4
442 34 Kungälv, Sweden

This declaration of conformity is issued under the sole responsibility of the manufacturer.

Object of declaration: **CONDUCTIVE AIR OPERATED DIAPHRAGM PUMPS**

The object of the declaration described above is in conformity with the relevant Union harmonisation legislation:

- Directive **2006/42/EC** of European Parliament and of the Council of 17 May 2006 on machinery
- Directive **2014/34/EU** of the European parliament and of the council of 26 February 2014 on Equipment or Protective System intended for use in potentially explosive atmospheres

Applied harmonised standards:

- **EN ISO 80079-36:2016-07**
- **EN ISO 80079-37:2016-07**

ATEX marking:

CE 2057 Ex **II 2G Ex h IIC T6...T4 Gb**
II 2D Ex h IIIC T60°C...T125°C Db

Notified body **J.S. Hamilton Poland Sp. z o.o. (2057)** performed **EU-type examination** and issued certificate **JSHP 19 ATEX 0018X.**

Signed for and on behalf of Tapflo AB

Håkan Ekstrand
Managing Director

Tapflo AB, 30.04.2020

0. GENERAL

0.1. Introduction

The Tapflo Air Operated Diaphragm Pump range is a complete series of pumps for industrial applications. The pumps are designed to be safe, simple and easy to use and maintain. The construction is seal-less and without rotating parts.
The powder transfer pump will handle different types of process powders with specific weight from 80 up to 720 kg/m^3 dry weight. The powder is transferred in a hermetic system from the powder container to the process.

With proper attention to maintenance, Tapflo Pumps will give efficient and trouble free operation. This instruction manual will familiarise operators with detailed information about installing, operating and maintaining of the pump.

0.2. Warning symbols

The following warning symbols are present in this instruction manual. This is what they say:



This symbol stands next to all safety instructions in this instruction manual where danger to life and limb may occur. Observe these instructions and proceed with utmost caution in these situations. Inform also other users of all safety instructions. In addition to the instructions in this instruction manual, the general safety and accident prevention regulations must be observed.



This signal stands at points in this instruction manual of particular importance for compliance with regulations and directives, for correct work flow and for the prevention of damage to and destruction of the complete dampener or its subassemblies.

0.3. Qualification and training of personnel



The personnel in charge of installation, operation and maintenance of the pumps we produce must be qualified to carry out the operations described in this manual. Tapflo shall not be held responsible for the training level of personnel and for the fact that they are not fully aware of the contents of this manual. In case any instructions in this manual are unclear or any information is lacking, please contact Tapflo before handling the pump.

1. INSTALLATION

1. INSTALLATION

1.1. Operation principle

The Tapflo diaphragm pump is driven by compressed air. The two diaphragms are connected by a diaphragm shaft and pushed back and forth by alternately pressurising the air chambers behind the diaphragms using an automatically cycling air valve system.

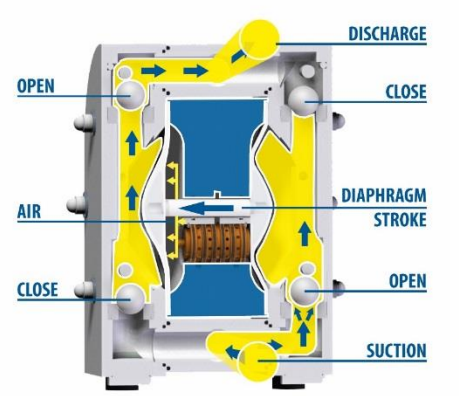

The Suction Cycle:

- **Suction**
  One diaphragm creates a suction action in one chamber (on the right) when being pulled back from the housing.
- **Discharge**
  The other diaphragm simultaneously transmits the air pressure to the liquid in the second chamber (on the left) of the housing, pushing it towards the discharge port.

During each cycle the air pressure on the back of the discharging diaphragm is equal to the head pressure on the liquid side. Tapflo diaphragm pumps can therefore be operated against a closed discharge valve with no negative effect to the life of the diaphragms.

A complete air injection system is included with all powder pumps:

1) Process powder
2) Valve ball [pos. 23]
3) Diaphragm [pos. 15]
4) Non return valve [pos. 962]
5) Needle valve [pos. 961]
6) Air injection line

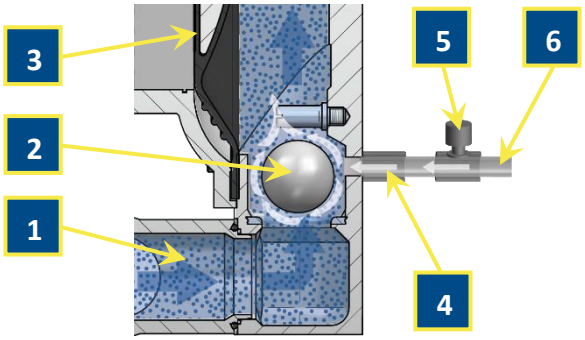

The air injection system eliminates powder pack up problems when starting the pump. Air is induced to the powder side of the pump from the pump air side (centre body) for diffusion of the powder. The injection flow can manually be adjusted by means of a needle valve to obtain optimum performance. The non-return valve prevents powder from getting to the pump's air side.

1. INSTALLATION

1.2. Receiving inspection

Although precaution is taken by us when packing and shipping, we urge you to carefully check the shipment on receipt. Make sure that all parts and accessories listed on the packing list are accounted for. Immediately report any damage or shortage to the transport company and to us.

1.3. Lifting and transportation

Before handling the pump check the weight of the pump (see 6.2. Technical data). Refer to Your local standards on how to handle the pump. If the weight is excessive to transport by hand it must be lifted using slings and a suitable lifting device e.g. a crane or forklift.
Always use at least two slings and make sure they are secured in such a way to prevent the pump from slipping and that the pump unit is hanging straight.
Never lift the pump with only one sling. Incorrect lifting can cause serious injury and/or damage to the pump.

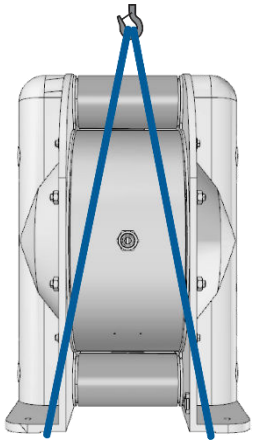

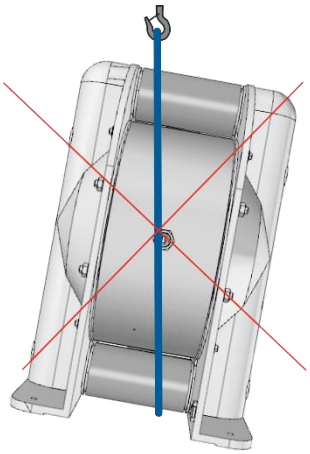

Never lift the pump under pressure.
Be careful that nobody passes under the pump when lifted.
Never try to lift the pump by the manifolds or hoses attached to the pump.
As an option pumps can be equipped with lifting eyebolts connected with the pump pin screws

1.4. Storage

If the equipment is to be stored prior to installation, place it in a clean location. The pump should be stored in an ambient temperature of 15°C (59°F) to 25°C (77°F) and relative humidity below 65%. It should not be exposed to any heat source e.g. radiator, sun as this could result in a negative way on the tightness of the pump. Do not remove the protective covers from the suction, discharge and air connections which have been fastened to keep pump internals free of debris. Clean the pump thoroughly before installation.

1.5. Foundation

The pump will operate properly without being fixed to a foundation. If fixation is needed for installation purposes, make sure the foundation is able to absorb vibrations. It is essential for the operation of the pump to mount the pump with the feet in a downward direction (see sketch in chapter 1.8 “Example of installation”).

1. INSTALLATION

1.6. Suction and discharge piping

Suction and discharge piping should be fully supported and anchored near to but independent of the pump. The piping connected to the pump should be a hose, to prevent undue stress and strain on the pump connections and the piping.

1.6.1. Rotary connections

The suction and discharge connections can be rotated 180°. This simplifies the assembly and installation of the pump. If you wish to rotate the connections, the housing screws must be slightly released, then screw a threaded nipple into the connection and rotate it.
Remember to re-tighten the screws with appropriate torque after rotating of the manifolds.

1.6.2. Connection of suction pipe

Remember that the suction pipe/connection is the most critical point, especially if the pump is priming. Just a small leakage will dramatically reduce the suction capability of the pump. When connecting the suction pipe, the following is recommended:

1) For satisfactory operation, use a reinforced hose (the suction power may otherwise shrink the hose) or other flexible piping. The internal diameter of the hose should be the same as on the suction connection (at the bottom of the pump) to have best suction capability. If the diameter of a hose is smaller, it will affect the pump's performance or cause its malfunction.

2) Make sure that the connection between the hose and the pump is completely tight, otherwise the suction capability will be reduced.

3) Always use as short suction pipe as possible. Avoid air pockets which can emerge with long piping.

1.6.3. Connection of discharge pipe

For this connection it is only recommended to have a simple and positive flow connection. Use a hose or flexible piping (minimum one meter) between the discharge connection and any rigid fixed piping. Coil the hose at least one turn. All components (hose, pipe, valves etc.) on the discharge piping must be designed for minimum PN 10.

1.7. Health and safety

The pump must be installed according to local and national safety rules.



The pumps are constructed for particular applications. Do not use the pump on applications different from that for which it was sold without consulting us to ascertain its suitability.
Pump materials must be selected carefully for each application. For more information, please contact Tapflo Group

1.7.1. Protection



In the interest of health and safety it is essential to wear protective clothing and safety goggles when operating, and/or working in the vicinity of Tapflo pumps.

1. INSTALLATION

1.7.2. Explosion hazardous environments – ATEX



All powder pumps are by standard ATEX approved, having model names TX... Follow below instructions and local/national rules for safe use.

ATEX (directive 2014/34/EU) classification of Tapflo TX pumps:

II 2G Ex h IIB T6...T4 Gb
II 2D Ex h IIIC T60°C...T125°C Db

Equipment group:	**II** – all other explosive areas than mines;
Equipment category:	**2** – high level of protection (can be used in zone 1);
Explosive atmosphere:	**G** – gas; **D** – dust;
Explosion group:	**IIB** – typical gas - ethylene; **IIIC** – conductive dust
Type of protection:	**Ex h** – constructional safety;
Temperature class:	**T6...T4** – in the event of a malfunction, the maximum temperature of a surface that may be exposed to gas **T4** = 135 °C ... **T6** = 85 °C
Equipment Protection Level (EPL):	**Gb** – High protection level **Db** – High protection level

Earth connection of the pump and other equipment

Connect a suitable earth wire to the stainless steel earth connection that is placed on the inside of one of the pump housings. Connect the other end of the earth wire to earth and also make sure that other equipment like hoses/pipes/containers etc. are properly earthed/connected.

Dry run in ATEX pump

ATEX approved pumps can run dry without increasing the risk of creating potential ignition sources. Nevertheless, dry run periods should be decreased to minimum as they increase the wear of parts inside of the pump. What is more, when running dry (e.g. during self-priming) the pump should run at a low speed controlled via a needle valve.

Cleaning the pump from solid particles

Pumps in ATEX execution should be cleaned in order to preserve antistatic properties. Layer of dust or other solid particles bigger than 5 mm on the outer surfaces is unacceptable.

1.7.3. Air pressure

The maximum air pressure for Tapflo pumps is 8 bar. Higher air pressure than 8 bar can damage the pump and may cause injury to personnel in vicinity of the pump. If you intend to apply a higher air pressure than 8 bar, please consult us.

1. INSTALLATION

1.7.4. Noise level



At tests, the noise level from a Tapflo pump has not exceeded 85 dB(A). Under some circumstances, for example if the pump is operating under high air pressure at low discharge head, the noise can be inconvenient or hazardous for personnel staying for long periods in the vicinity of the pump. This hazard can be prevented by:

- using suitable ear protection;
- lowering the air pressure and/or raising the discharge head;
- leading out the outgoing air from the room by connecting a hose to the muffler connection of the pump;
- using elastomer valve balls (EPDM, NBR or polyurethane) instead of PTFE, ceramic or stainless steel, provided that the elastomer is compatible with the pumped liquid.

1.7.5. Temperature hazards

Raised temperature can cause damage on the pump and/or piping and may also be hazardous for personnel in the vicinity of the pump/piping. Avoid quick temperature changes and do not exceed the maximum temperature specified when the pump was ordered. See also general max temperatures based on water in chapter 6 *"DATA"*.

The fluid remaining in the connected piping, as well as in the pump itself, may expand because of freezing or heat, which may cause damage to the pump or/and piping, and lead to leakage of the fluid.

1.8. Air connection

Screw the air hose into the air intake on the centre block of the pump with for example a quick release coupling. For best efficiency, use the same hose diameter as the internal diameter of the connection on the air intake.

1.8.1. Air treatment system



The air valve is constructed for oil-free air. Lubrication of the air is ***not allowed.*** However, if the air is ***very dry*** (laboratory air), we recommend to use a plastic air valve. Maximum air pressure is 8 bar. As prevention purpose, a filtration of the air by means of a 5 micron filter or finer is recommended. Recommended air quality according to PN-ISO8573-1:2010 is particles class 6, water class 4 and oil class 4. Dirt in the air can under unfortunate circumstances be the cause of a breakdown. If a compressor used to generate compressed air is not fitted with an air dryer it is recommended to use a water separator to remove the extent of water from the prepared air.

To facilitate the operation of the pump we recommend an air treatment system connected to the air supply. These components should be included:

1) Regulator to adjust the air pressure;
2) Manometer to read the actual pressure;
3) Needle valve to adjust the air flow (especially when operating the pump in the lower range of performance);
4) Filter.

These components are included in Tapflo's **Air treatment system** which can be ordered from us.

1. INSTALLATION

1.9. Example of installation

1) Gate valve compressed air
2) Filter and pressure regulator
3) Flexible hose
4) Needle valve
5) Flexible piping
6) Gate valve suction
7) Gate valve discharge
8) Coiled flexible piping
9) Flow gauge

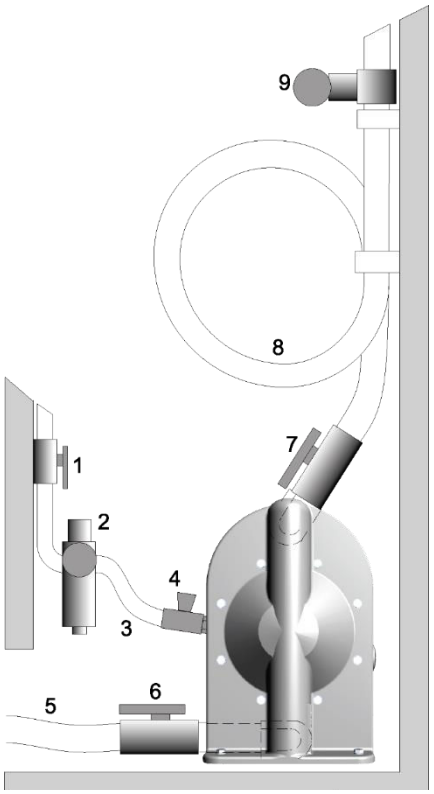

1.10. Recommended installation

When pumping powder it is recommended that the powder container is located higher than the pump to ensure better flow of the product and easier priming of the pump (see sketch below).



NOTE!



Even if all above safety instructions are met and complied with, there still exists a minor danger in the event of a leakage or mechanical damage of the pump. In such case the pumped product can emerge on sealing areas and connections.

2. OPERATION

2. OPERATION

2.1. Before starting the pump

- Make sure the pump is installed according to the installation instruction (chapter 1).



- Before starting the pump, make sure that the valve on the suction side (pos. 6 – chapter 1.9) has been opened.
- Filling of the pump before start is not necessary.



- When installation is new or reinstalled, a test run of the pump should be conducted to make sure that the pump operates normally and does not leak.
- When installation is new or reinstalled, check the pump housing nuts tightening torque (see chapter 6.3 *Tightening torques*). After approximately one week of operation, the torque should be checked again. This is important to prevent possible leakage.

2.2. Starting and operation

- Open the discharge valve.
- Open the air injection system to avoid accumulation of powder. Turn the needle valve counter-clockwise to open the air injection system.
- The complete pump should remain dry for easy and free flow of powder.
- ***Note! Considering the suction capacity when air is still in the suction pipe, it is recommended to start with low air pressure/flow (slowly) at the beginning.***
- When the pump has been filled with powder, the air pressure/flow may be raised in order to increase the suction capacity of the pump.
- The performance of the pump can be adjusted through the air supply by using a needle valve and a pressure regulator. The performance can also be adjusted by normal flow control on the discharge side of the system.
- ***Note! Never operate the pump against closed suction valve.***

2.2.1. Dry running

Although the pump is prepared for dry running it is important to have in mind that long periods of dry run may cause damage to the air valve and circlips as well as increased wear of the diaphragms. Also an empty pump should operate at low speeds – controlled by a needle-valve.

2. OPERATION

2.2.2. Optimization of the pump lifetime

- Running at full frequency (maximum air pressure/flow) continuously will cause premature wear of the components. When there is possibility of the pump running dry or/and at full frequency it is recommended to use an air valve with a PET piston. As a general rule, we recommend to run at half of the maximum capacity of the pump.
- As stated in chapter *1.8.1* Tapflo recommends to use an appropriate air treatment system in order to extend the pump's lifetime.



- If the air humidity is high, use of a water separator or air dryer is recommended. Otherwise on the air discharge side due to decompression, icing on the muffler can appear causing it to shrink and eventually it can shoot out of its socket.
- If the ambient air is humid, icing can occur outside of the muffler. In such case it is recommended to use a longer exhaust of the compressed air (ca. 500 mm / 19,7'').
- If icing / freezing is still a problem with the standard muffler, we recommend using our heavy duty metal muffler. Contact us for more information.
- When the pump is shut down while pumping a liquid containing particles, the particulate matter contained in the liquid will be deposited and get stuck inside the pump chamber. Therefore after finishing work the pump must be emptied of the remaining fluid. Otherwise, when starting the pump again, the diaphragm may get damaged and the shaft may bend leading to grub screw fracture.

2.3. Pump stopping

The pump can be stopped in two ways:

1) By closing of the discharge valve. The pressure from the system will stop the pump automatically. The pump restarts easily when the valve is opened again. ***NOTE!*** When using this method keep in mind that air must be supplied to the pump. This is essential to keep the diaphragms in balance what protects them from premature failure.

2) By cutting off the air supply.
NOTE! When using this method make sure that the discharge valve is opened to relief the pumps pressure.

2.4. Residual risks



Even with proper application and observance of all points listed in this operating manual, there is still an estimable and unexpected residual risk when using the pumps. It may leak, fail due to wear, application-related causes or system-related circumstances.

2. OPERATION

2.5. Disposal after expiration of the life expectancy



The metallic components like aluminium, stainless steel and carbon steel can be recycled. Plastic parts are not recyclable and must be disposed of as residual waste. The pump must be disposed of properly, according to local regulations. It should be noted that potentially dangerous fluid residues may remain in the pump and can create a hazard to the operator or the environment, therefore the pump has to thoroughly cleaned before disposal.

2.6. Actions in an emergency



In case of a leakage of an unknown fluid, respiratory protection should be worn and contact with the fluid avoided. During firefighting, no special hazards are to be expected from the pump itself. In addition, the currently handled fluid and the corresponding safety data sheet must be taken into account. When fluid leakage occurs, the air supply has to be closed and the pressure released. During spillage of an aggressive liquid, local and national safety rules must be followed.

3. MAINTENANCE

3.1. When the pump is new or reassembled



If the pump is new or reassembled after maintenance it is important to retighten the pump housing screws / nuts (pos. 37) after one week of operation.
Make sure to use the right torque – see chapter *6.3 Tightening torques*..

3.1.1. Performance test

When installation is new, a test run of the pump should be conducted. Gauge the capacity at specific air pressure/flow. This information is useful for checking performance in the future as wear takes place. You will be able to set schedules for maintenance of the pump and to select spare parts to be kept on stock.

3.2. Routine inspection



Frequent observation of the pump operation is recommended to detect problems. A change in sound of the running pump can be an indication of wearing parts (see chapter *3.4 "Location of faults"* below).
Leaking liquid from the pump and changes of performance may also be detected. Routine inspections should be conducted frequently.
We recommend to conduct a daily check and keep records of the following:

- Leakage of fluid form any connection of the pump
- Tightness of all connection parts of the pump and any peripheral equipment
- Complete inspection in regular intervals has been done

In case any of the above is not fulfilled, do not start the pump and implement corrective actions. Establish a preventive maintenance schedule based on the pump's service history. Scheduled maintenance is especially important to prevent spills or leakage due to diaphragm failure.

3.3. Complete inspection



The intervals for a complete inspection depend upon the operation conditions of the pump. The characteristics of the liquid, temperature, materials used in the pump and running time decide how often a complete inspection is necessary.
Nevertheless, Tapflo recommend to inspect the pump at least once a year. Parts from **KIT AIR** and **KIT LIQ** should be changed during inspection. See paragraph 5.3 for detailed KIT content.

If a problem has occurred, or if the pump is in need of a complete inspection, refer to chapters *3.4 "Location of faults"* and *3.5 "Dismantling of the pump"*. You are of course warmly welcome to consult us for further help.
Parts that are subject to wear should be kept in stock, see our recommendations in chapter 5.3 *"Stocking recommendation"*.

3. MAINTENANCE

3.4. Location of faults

PROBLEM	POSSIBLE FAULT	POSSIBLE SOLUTION
The pump does not run	The air pressure is to low The air connection is blocked Muffler is blocked Air valve is defective Dirt in the pump chamber Diaphragm breakdown	Increase air pressure via a filter-regulator Check / clean air supply connection Check / clean / replace muffler Clean / replace complete air valve Remove debris from the chambers Replace diaphragm
The suction is bad	Suction connection is not tight Suction connection is blocked Muffler is blocked Valve balls are blocked or damaged Valve seats are worn Pump starts with high pressure Air in suction / discharge line Dry suction against discharge pressure	Tighten the suction line Clean suction line Check / clean / replace muffler Check dimensions and shape of valve balls Check if product is not accumulating near the valve seat area Check dimensions and shape of valve seats Start the pump slowly (see chapter 2.2) Vent suction / discharge line Wet the pump / start without discharge pressure
The pump runs irregular	Valve balls are blocked Sealing in centre block Air valve is defective Diaphragm breakdown Valve seats are worn Icing on the muffler	Check dimensions and shape of valve balls Check if product is not accumulating near the valve seat area Replace sealing Clean / replace air valve Replace diaphragm Check dimensions and shape of valve seats Improve air quality (see chapters 1.7.1 and 2.2.2)
Bad flow/pressure	Pressure fall in air supply Pressure losses on suction side Air supply / air valve leaking Suction or air connection blocked Muffler is blocked Valve ball worn or broken Valve seats are worn Air in liquid Diaphragm breakdown Icing on the muffler	Increase air pressure via a filter-regulator Check/change installation on suction side Check / repair / replace air supply / air valve Check / clean air supply / suction connection Check / clean / replace muffler Check dimensions and shape of valve balls Check if product is not accumulating near the valve seat area Check dimensions and shape of valve seats Seal suction line; check / refill container Check / replace diaphragms Improve air quality (see chapters 1.7.1 and 2.2.2)
Product leaks from the pump	Screws on the housing not properly tightened O-rings on manifolds damaged Damaged diaphragm Tension / stress form the installation	Check tightening torques of the screws Replace O-rings Check / replace diaphragms Adjust installation, eliminate stress, when using a dampener provide separate support for it (see dampener IOM manual).
Product comes out of the muffler	Diaphragm breakdown	Replace diaphragm
Diaphragm breakdown	Wrong selection of material Too high pressure in the installation Long periods of dry running Too high pressure on suction side	Contact us for information on material selection Use air treatment system for protection When dry, run pump slowly (see chapter 2.2) Make sure there is pressure balance between the air and liquid side of the diaphragm

3. MAINTENANCE

3.5. Disassembly of the pump

The numbers put in brackets, refer to the part numbers in the spare part drawings and spare part lists in chapter *5. "SPARE PARTS"*.

3.5.1. Before the disassembly procedure



Be sure to clean the pump form the powder. Cleanse or neutralize the pump thoroughly. Disconnect the air supply and then the suction and discharge connections.

3.5.2. Disassembly procedure

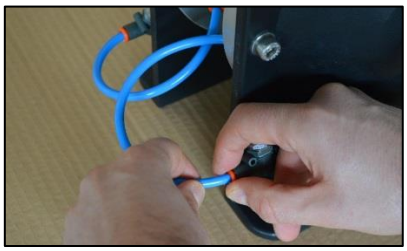

Fig. 3.5.1
Disconnect the pneumatic hoses from the pump.

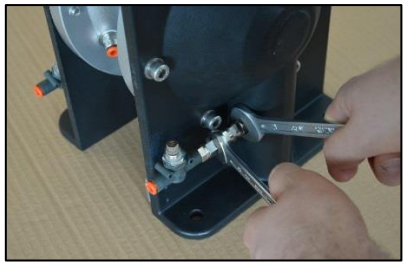

Fig. 3.5.2
If necessary, remove air injection system [96].



Fig. 3.5.3
Unscrew the housing screws [37] on one side of the pump and take off the housing [11]. Remove the loose manifolds [13].



Fig. 3.5.4
Unscrew one of the diaphragms [15] from the shaft [16].

3. MAINTENANCE

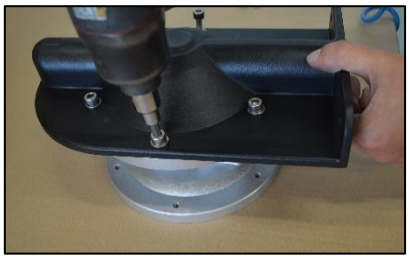

Fig. 3.5.5
Flip the pump and unscrew the second housing [11].

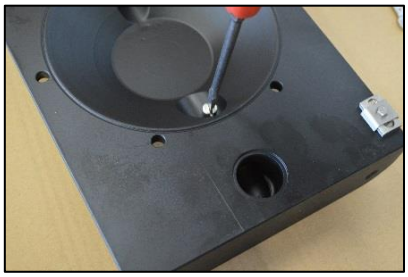

Fig. 3.5.6
In order to take out the valve balls [23], unscrew the valve ball stop [22] from the hocvcvusing [11].
ATTENTION! The stoppers are tightened with a small amount of glue. If unscrewing is difficult, heat up the screw up to 250ºC to loosen the glue.
Make sure the allen key used is of good condition not to damage the stopper socket.

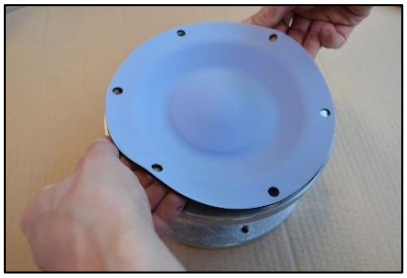

Fig 3.5.7
Pull out the shaft [16] from the centre block [12] and unscrew the second diaphragm [15].



Fig 3.5.8 ***For TX70 up to TX820***
If the shaft sealing [36] seems to be worn (internal leakage of air is present), remove them together with their back-up O-rings [47] by means of a pointing tool.
ATTENTION! Take extra care when carrying out of this operation. If any scratches are made on the inner surface of the centre body air leakage will occur. During this operation, the sealing and O-rings usually get destroyed so make sure you have spare parts at hand.

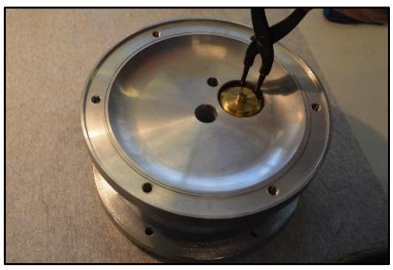

Fig 3.5.9
Using pliers remove both circlips [27] from the centre block [12].
ATTENTION! While doing this, cover yourself with your other hand, as the circlip easily flips away.



Fig 3.5.10
Press out the air valve [61] by means of a pressing device. Be careful not to damage the brass edges of the air valve.

3. MAINTENANCE

The pump is now completely disassembled. Check all components for wear or damage and replace if necessary.
When air valve is removed from the centre body check the external O-rings (6 x pos. 30) condition and replace if necessary.

3.6. Assembly of the pump

The assembly procedure is done in the reverse order to the disassembly.
Nevertheless there are a few things that you have to remember in order to assemble the pump correctly.

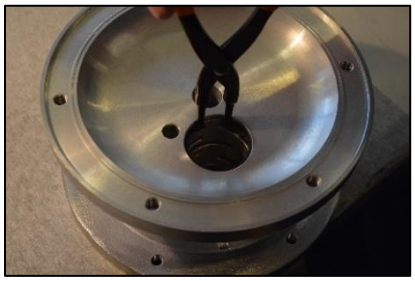

Fig. 3.6.1
Before inserting the air valve [61], insert the circlip [27] on one side of the centre block [12].



Fig. 3.6.2
When putting the air valve [61] into the centre block [12], apply some water or alcohol on the O-rings to provide smooth insertion of the air valve. It is recommended to use a pressing device for this operation.



Fig. 3.6.3
Apply some Loctite 243 on the thread before screwing in of the valve ball stops [22].
ATTENTION! Make sure the glue is inserted on the thread and not only on the bottom surface of the orifice.



Fig. 3.6.4
When assembling the diaphragms [15], the first step is to screw the grub screw into one of the diaphragms as much as possible.

3. MAINTENANCE



Fig. 3.6.5
Screw in the second diaphragm [15] on the shaft [16]. Make sure that the holes of the diaphragm align with the holes of the centre body.
NOTE: It might be necessary to back up the diaphragm a bit to align the holes.

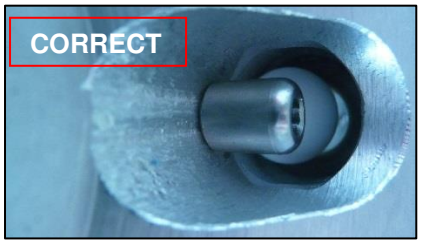

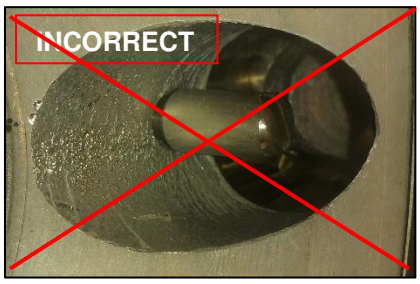

Fig. 3.6.6
Make sure that after screwing in of the valve ball stop [22] there is no free space between the stopper and the housing [11].
ATTENTION! If the valve ball stop is not correctly screwed in it may break and case damage to the pump interiors.

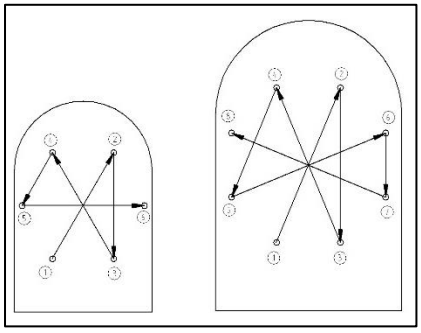

Fig. 3.6.7
When fastening the screws, remember to do it according to the tightening procedure and with the appropriate torque.
NOTE! After one week of operation retighten the screws with the appropriate torque.

3.6.1. Test run

We recommend you to conduct a test run of the pump before installing it in the system, so no liquid gets wasted if the pump leaks or perhaps does not start accordingly to wrong assembly of the pump.
After one weeks of operation retighten the screws with appropriate torque.

4. OPTIONS

4.1. Powder pump without air injection system – 12HT

The powder pump can be ordered without the air injection system. In such case the pump has only drilled and tapered holes on both housings. The air injection system (pos. 96) is not included and there are no holes in the centre body. In this configuration the air can be supplied to the valve seat area from an outer source and not from the pump air side.

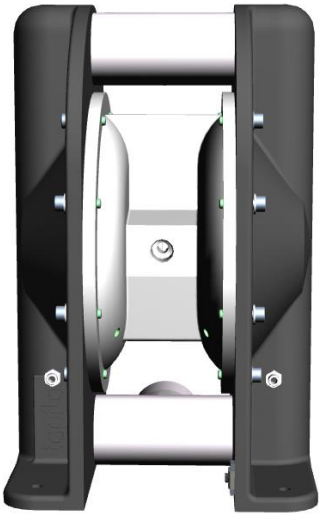

4.2. Air injection system on upper and lower seats – 12AI

As an additional option Tapflo offers a powder pump with an air injection system on both upper and lower valve seats. This is to help protect also the upper valve seat and aerate the powder even more.

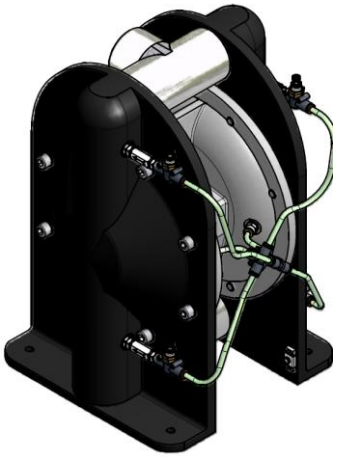

4. OPTIONS

4.3. Stainless steel pump – industrial and hygienic

Optionally the powder pump wetted materials can be made of stainless steel. This refers both to industrial and sanitary version of the pump.

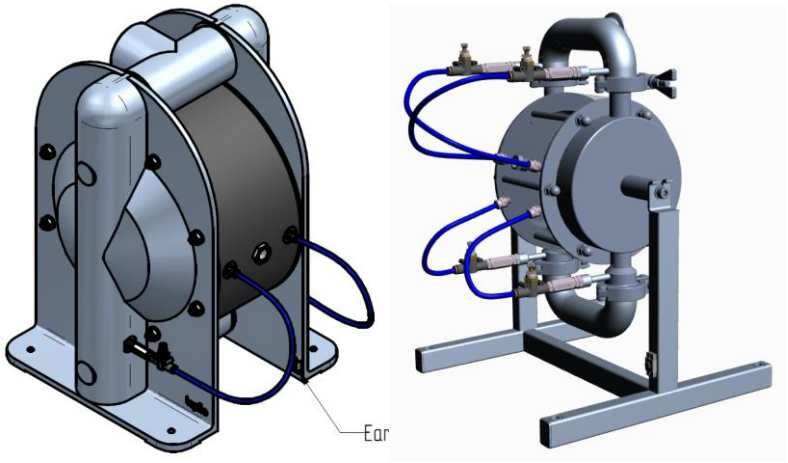

5. SPARE PARTS

5. SPARE PARTS

5.1. Spare parts drawing

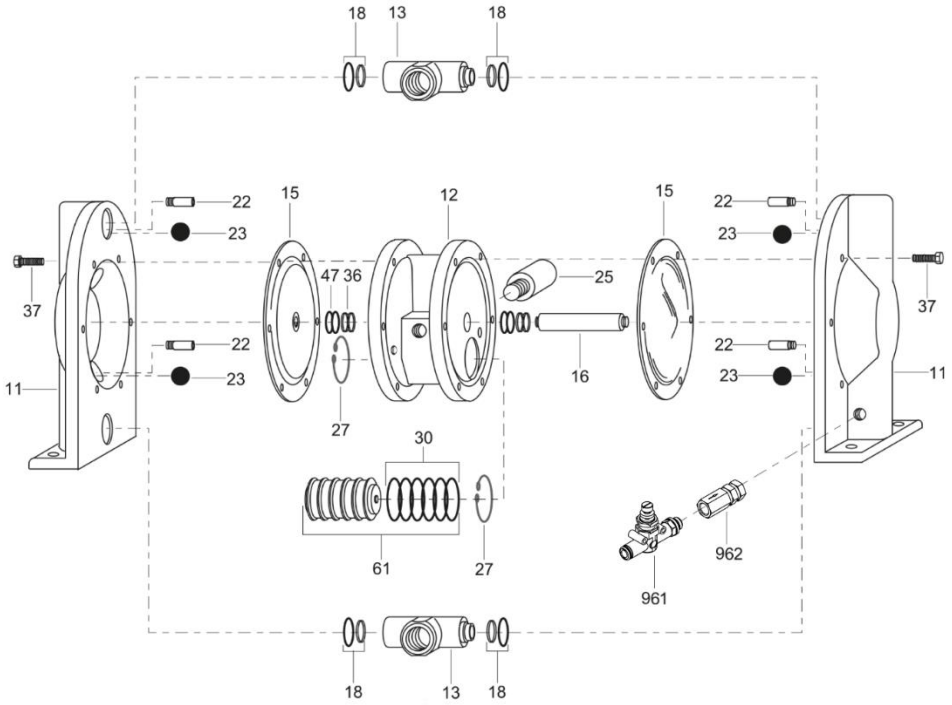

5.2. Spare parts list

Pos.	Q-ty	Description	Material	KIT LIQ	KIT AIR
1116R	1	Housing – right	PTFE coated aluminium, aluminium or cast iron		
1116L	1	Housing - left	PTFE coated aluminium, aluminium or cast iron		
12	1	Centre block	Aluminium		
13	2	In/Outlet	AISI 316L (std.), PTFE coated aluminium		
15	2	Diaphragm	EPDM, PTFE or NBR	X	
16	1	Diaphragm shaft	AISI 304L		X
18	4	O-ring/gasket set (in/outlet)	Klinger/NBR (std.), Klinger/EPDM or Klinger/FKM	X	X
22	4	Valve ball stop	AISI 316		
23	4	Valve ball	PTFE, AISI 316, EPDM, NBR, Polyurethane, FKM, PU	X	
25	1	Muffler	PP		X
27	2	Circlip	Cr3 coated steel		
30	6	O-ring	NBR (std.), FKM, EPDM		
36	4	Centre block sealing	PE		X
37	12/16*	Screw	Zinc plated steel		
38	12/16*	Washer	Zinc plated steel		
47	4/8**	O-ring (back-up for 36)	NBR (std.), FKM, EPDM		X
61	1	Air valve complete	Brass/NBR (std.), brass/FKM or brass/EPDM, AISI 316/FKM		X
96	1	Air Injection – complete set***	-		
961	2	Needle valve	Teknopolymer / nickel coated brass		
962	2	Check valve	Nickel coated brass		

* 12 for TXP70 and TXP120 / 16 for TXP220, TXP420 and TXP820

** 4 for TXP70, TXP220, TXP420 and TXP820 / 8 for TXP120

*** Includes needle valves, check valves, pneumatic hoses and push fit adaptors

5. SPARE PARTS

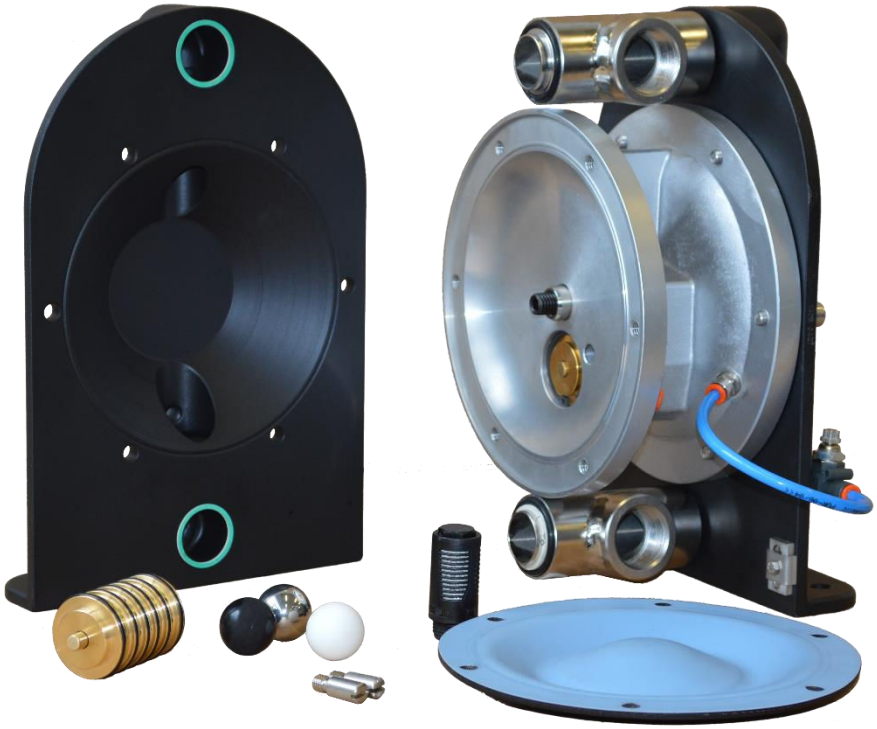

5.3. Stocking recommendation

Even at normal operation some details in the pump will be worn. In order to avoid expensive breakdowns we recommend having a few spare parts in stock.

Depending on the severity of the operation and the importance of assuring continuous work we offer three different spare part ***KITS*** – ***KIT LIQ*** includes parts on pump wetted side and ***KIT AIR*** includes parts on the pump air side and that are subject to wear.

	Pos.	Description	Q-ty
KIT LIQ	15	Diaphragm	2
	18	O-ring set in/outlet	4
	23	Valve ball	4

	Pos.	Description	Q-ty
KIT AIR	18	O-ring set in/outlet	4
	61	Air valve complete	1
	16	Diaphragm shaft	1
	36	Centre block seal	4
	47	O-ring(back up for 36)	4/8*
	25	Muffler	1

* 4 for TXP70, TXP220, TXP420 and TXP820 / 8 for TXP120

5.4. How to order parts

When ordering spare parts for Tapflo pumps, please let us know what is the ***model number*** and ***serial number*** from the pump housing. Then just indicate the part numbers from the spare parts list and quantity of each item.

5. SPARE PARTS

5.5. Pump code

The model number on the pump and on the front page of this instruction manual tells the pump size and materials of the pump.

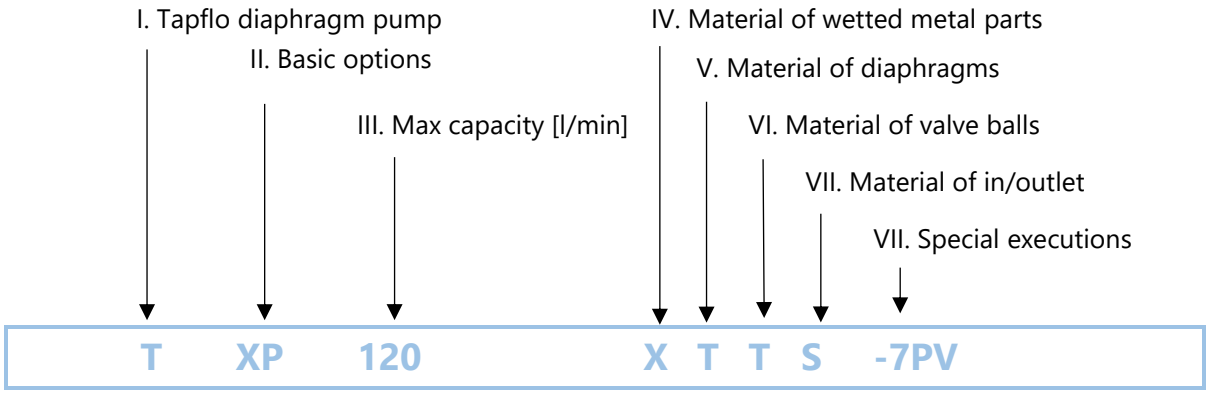

I. T = Tapflo diaphragm pump

II. Basic options:
- P = Powder pump
- X = ATEX approved, group II, cat. 2

IV. Material of wetted metal parts:
- A = Aluminium
- X = PTFE coated aluminium
- S = Stainless steel

V. Material of diaphragms:
- E = EPDM
- N = NBR (nitrile rubber)
- T = PTFE
- B = PTFE TFM 1705b

VI. Material of valve balls:
- E = EPDM
- N = NBR (nitrile rubber)
- T = PTFE
- S = AISI 316 stainless steel
- U = PU (polyurethane)
- K = Ceramic
- V = FKM
- B = PTFE TFM 1635

VII. Material of in/outlets
- S = AISI 316L stainless steel (only for alu pumps)
- A = Aluminium

VIII. Special executions:
- 1 = Optional in/outlet material
- 3 = Optional connection type
- 5 = Other special executions
- 6 = Optional material of centre body
- 7 = Optional material of air valve
- 8 = Optional material of pos. 18 seals
- 9 = Optional material of housing pin screws
- **12 = Powder pump options**
  Std. execution = air inj. on lower valve seats
  AI = air inj. on upper and lower valve seats
  HT = drilled and tapered holes on housing only, not on centre body. No air inj. valves.
- 14 = Optional pump feet

6. DATA

6.1. Capacity curves

Pump capacities differ due to different powder specific properties it is recommended the test the pump on actual product and installation in order to evaluate working conditions and required capacity.

6.2. Technical data

TECHNICAL DATA	PUMP SIZE				
	TXP70	TXP120	TXP220	TXP420	TXP820
Max discharge pressure [bar] / [psi]	8 / 116	8 / 116	8 / 116	8 / 116	8 / 116
Max air pressure [bar] / [psi]	8 / 116	8 / 116	8 / 116	8 / 116	8 / 116
Max size of solids ø in [mm] / [in]	4 / 0.16	6 / 0.24	10 / 0.39	15 / 0.59	13 / 0.51
Max temp. with NBR [°C] / [°F]	70 / 158	70 / 158	70 / 158	70 / 158	70 / 158
Max temp. with EPDM [°C] / [°F]	90 / 194	90 / 194	90 / 194	90 / 194	90 / 194
Max temp. with PTFE [°C] / [°F]	110 / 230	110 / 230	110 / 230	110 / 230	110 / 230
Weight of pump [kg] / [lb]	5 / 11	9.9 / 21.8	21.5 / 47.4	42.7 / 94.1	95.5 / 210.5
Connection standard	BSP female thread (G)	BSP female thread (G)	BSP female thread (G)	BSP female thread (G)	BSP female thread (G)

6.3. Tightening torques

Checking of the tightening torques is necessary after all periods of stoppage, when temperature variations are a factor and after all transport and maintenance of the pump. What is more for proper operation and safety the torque values should be checked frequently as part of preventive maintenance (please contact Tapflo for interval proposals).

PUMP SIZE	MOUNTING TORQUE [Nm]	
	Screw pos. 37	Grub screw pos. 16
TXP70	12	10
TXP120	17	13
TXP220	18	20
TXP420	20	22
TXP820	30	26

6. DATA

6.4. Dimensions

Dimensions in mm (where other is not indicated)

Dimensions in inch (where other is not indicated)

General dimensions only, ask us for detailed drawings. Changes reserved without notice.

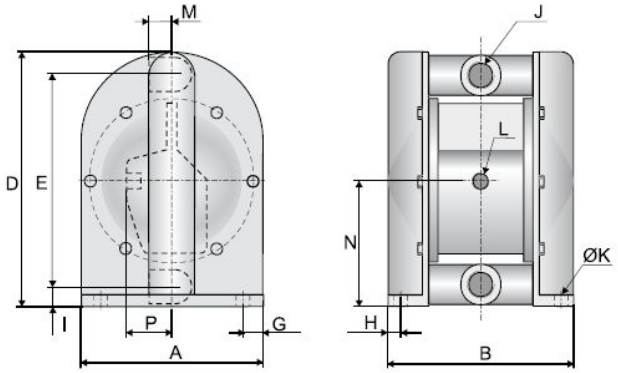

Dimension	PUMP SIZE				
	TXP70	TXP120	TXP220	TXP420	TXP820
A	151	200	277	356	470
	5.95	7.87	10.9	14.02	18.5
A (including air injection system)	~250	~252	~396	~402	~512
	~9.84	~9.92	~15.59	~15.83	~20.16
B	168	199	268	350	488
	6.61	7.83	10.55	12.01	19.21
D	233	301	419	545	840
	1.97	11.85	16.5	21.46	33.07
E	190	252	346	447	688
	7.48	9.92	13.62	17.60	27.08
G	17.5	20	28.5	38	50
	0.69	0.79	1.12	1.49	1.97
H	19	21	28	34	53.5
	0.75	0.83	1.10	1.34	2.11
I	22	26	34	48	82
	0.87	1.02	1.34	1.89	3.23
J	G¾"	G1"	G1 ½"	G2"	G3"
	¾	1	1 ½	2	3
ØK	10	10	10	10.5	12.5
	0.39	0.39	0.39	0.41	0.49
L	G¼"	G¼"	G½"	G½"	G¾"
	¼	¼	½	½	¾
M	29	33.5	63	80	84.5
	1.14	1.32	2.48	3.15	3.33
N	117	152	207	274	356
	4.61	5.98	8.15	10.79	14.02
P	47	36	57	57	72.5
	1.85	1.42	2.24	2.24	2.85
Air injection system thread	G1/8"	G1/8"	G1/8"	G1/8"	G1/4"
	1/8	1/8	1/8	1/8	1/4

6. DATA

6.5. Permitted loads on manifolds

We recommend not to exceed the following loads and forces reacting on the manifolds.

TXP70		
Direction	**Load [N] (inlet/outlet)**	**Moment of force (inlet/outlet) [Nm]**
X	31	6.3
Y	31	6.3
Z	31	6.3

TXP120		
Direction	**Load [N] (inlet/outlet)**	**Moment of force (inlet/outlet) [Nm]**
X	35	7.3
Y	35	7.3
Z	35	7.3

TXP220		
Direction	**Load [N] (inlet/outlet)**	**Moment of force (inlet/outlet) [Nm]**
X	43	8.8
Y	43	8.8
Z	43	8.8

TXP420		
Direction	**Load [N] (inlet/outlet)**	**Moment of force (inlet/outlet) [Nm]**
X	56	11.5
Y	56	11.5
Z	56	11.5

TXP820		
Direction	**Load [N] (inlet/outlet)**	**Moment of force (inlet/outlet) [Nm]**
X	93	13.2
Y	93	13.2
Z	93	13.2

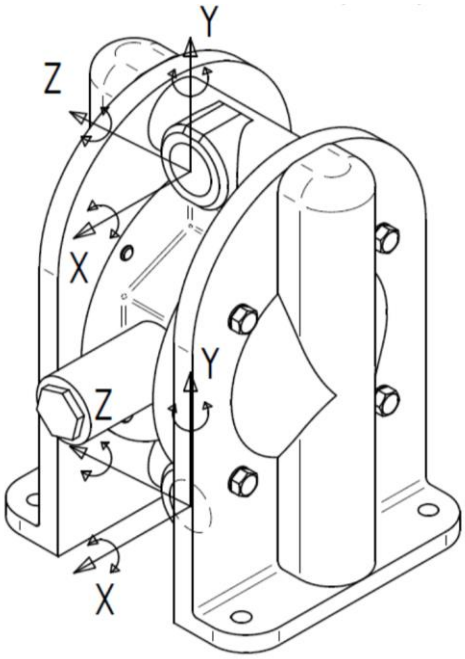

7. WARRANTY

7.1. Warranty form

Company:

Telephone: Fax:

Address:

Country: Contact Name:

E-mail:

Delivery Date: Date of pump installation:

Pump type:

Serial No (see name plate or stamped on pump housing):

Description of the fault:

The installation:

Liquid:

Temperature [°C]: Viscosity [cPs]: Spec grav. [kg/m^3]: pH-value:

Content of particles: %, of max size [mm]:

Flow [l/min]: Duty [h/day]: No of starts per day:

Discharge head [mWC]: Suction head / lift [m]:

Air pressure [bar]: Quality of the air (filter, micron, lubrication):

Other:

Place for sketch of installation:

7. WARRANTY

7.2. Returning parts

When returning parts to Tapflo please follow this procedure:

- Consult Tapflo for shipping instructions.
- Cleanse or neutralize and rinse the part/pump. Make sure the part/pump is completely empty from liquid.
- Pack the return articles carefully to prevent any damage during transportation.

Goods will not be accepted unless the above procedure has been complied with.

7.3. Warranty

Tapflo warrants products under conditions as stated below for a period of not more than 5 years from installation and not more than 6 years from date of manufacturing.

1. The following terms and conditions apply to the sale of machinery, components and related services and products, of Tapflo (hereinafter "the products").

2. Tapflo (the manufacturer) warrants that:

    a. its products are free of defects in material, design and workmanship at the time of original purchase;
    b. its products will function in accordance with Tapflo operative manuals; Tapflo does not guarantee that the product will meet the precise needs of the Customer, except for those purposes set out in any invitation to render documents or other documents specifically made available to Tapflo before entering into this agreement;
    c. high quality materials are used in the construction of the pumps and that machining and assembly are carried out to the highest standards.

    Except as expressly stated above, Tapflo makes no warranties, express or implied, concerning the products, including all warranties of fitness for a particular purpose.

3. This warranty shall not be applicable in circumstances other than defects in material, design, and workmanship. In particular warranty shall not cover the following:

    a. Periodic checks, maintenance, repair and replacement of parts due to normal wear and tear (seals, O-rings, rubber items, diaphragms, air valves etc..);
    b. Damage to the product resulting from:
        b.1. Tampering with, abuse or misuse, including but not limited to failure to use the product for its normal purposes as stated at the time of purchase or in accordance with Tapflo instructions for use and maintenance of the product, or the installation or improper ventilation or use of the product in a manner inconsistent with the technical or safety standard in force;
        b.2. Repairs performed by non-skilled personnel or use of non-original Tapflo parts;

b.3. Accidents or any cause beyond the control of Tapflo, including but not limited to lightning, water, fire, earthquake, and public disturbances, etc.;

4. The warrantee shall cover the replacement or repairing of any parts, which is documented faulty due to construction or assembling, with new or repaired parts free of charges delivered by Tapflo. Parts subjected to normal tear and wear shall not be covered by the warranty. Tapflo shall decide as to whether the defective or faulty part shall be replaced or repaired.

5. The warrantee of the products shall be valid for a period in accordance to the current law from the date of delivery, under the condition that notice of the alleged defect to the products or parts thereof be given to Tapflo in written within the mandatory term of 8 days from the discovery. Repair or replacement under the terms of this warranty shall not give a right to an extension to, or a new commencement of, the period of warranty.

6. Repair or replacement under the terms of this warranty shall not give a right to an extension to, or a new commencement of, the period of warranty. Repair or replacement under the terms of this warranty may be fulfilled with functionally equivalent reconditioned units. Tapflo qualified personnel shall be solely entitled to carry out repair or replacement of faulty parts after careful examination of the pump. Replaced faulty parts or components will become the property of Tapflo.

7. The products are built in accordance with standard CE normative and are tested (where applicable) by Tapflo. Approval and tests by other control authority are for the customer's account. The products shall not be considered defective in materials, design or workmanship if they need to be adapted, changed or adjusted to conform to national or local technical or safety standards in force in any country other than that for which the unit was originally designed and manufactured. This warranty shall not reimburse such adaptations, changes or adjustments, or attempt to do so, whether properly performed or not, nor any damage resulting from them, nor any adaptation, change or adjustments to upgrade the products from their normal purpose as described in the products operative manual without the prior written consent of Tapflo.

8. Installation, including electric and other connections to utility mains according to Tapflo drawings, is for the cost and responsibility of the customer, unless otherwise agreed in writing.

9. Tapflo will not be liable on any claim, whether in contact, tort, or otherwise, for any indirect, special, incidental, or consequential damages, caused to the customer or to third parties, including loss of profits, arising by any possible infringement of par. 3 above or by the customer or third parties being in the impossibility of using the products.

Steady the above, Tapflo liability to the customer or third parties from any claim, whether in contract, tort, or otherwise, shall be limited to the total amount paid by the customer for the product that caused the damages.

TAPFLO AB

Sweden

Filaregatan 4 | S-442 34 Kungälv

Tel: +46 303 63390
Fax: +46 303 19916

E-mail addresses:
Commercial questions: sales@tapflo.com
Orders: order@tapflo.com
Tech support: support@tapflo.com

Tapflo products and services are available worldwide.

Tapflo is represented by own Tapflo Group Companies and carefully selected distributors assuring highest Tapflo service quality for our customers' convenience.

AUSTRALIA | AUSTRIA | AZERBAIJAN | BAHRAIN | BELGIUM | BOSNIA | BRAZIL | BULGARIA | CANADA | CHILE | CHINA | COLOMBIA | CROATIA | CZECH REPUBLIC | DENMARK | ECUADOR | EGYPT | ESTONIA | FINLAND | FRANCE | GEORGIA | GERMANY | GREECE | HONG-KONG | HUNGARY | ICELAND | INDIA | INDONESIA | IRELAND | ISRAEL | ITALY | JAPAN | JORDAN | KAZAKHSTAN | KUWAIT | LATVIA | LIBYA | LITHUANIA | MACEDONIA | MALAYSIA | MEXICO | MONTENEGRO | MOROCCO | NETHERLANDS | NEW ZEALAND | NORWAY | OMAN | PHILIPPINES | POLAND | PORTUGAL | QATAR | ROMANIA | SAUDI ARABIA | SERBIA | SINGAPORE | SLOVAKIA | SLOVENIA | SOUTH AFRICA | SOUTH KOREA | SPAIN | SWEDEN | SWITZERLAND | TAIWAN | THAILAND | TURKEY | UKRAINE | UNITED ARAB EMIRATES | UNITED KINGDOM | USA | UZBEKISTAN | VIETNAM

Tapflo Group Companies

Australia
Tapflo Oceania (Pty) Ltd.
Tel: +61 1800303633
sales@tapflo.com.au

Austria
Tapflo GmbH
Tel: +43 73227292910
sales@tapflo.at

Bahrain
Tapflo Gulf General Trading Co. L.L.C
Tel: +971 58 582 3630
sales@tapflogulf.com

Baltic States
Tapflo SIA
Tel: +371 67472205
sales@tapflo.lv

Belgium
Tapflo Benelux B.V.
Tel: +31 (0) 6 21850664
info@tapflo.nl

Bulgaria
Tapflo EOOD
Tel: +359 886 124 937
office@tapflo.bg

Canada
Tapflo Canada
Tel: +1 514 409 8380
office@tapflo.ca

China
Tapflo (Wuxi) Pumps Co. Ltd.
Tel: +86 51082417072
sales@tapflo.cn

Croatia
Tapflo d.o.o.
Tel: +385 914884666
sales@tapflo.hr

Czech Republic
Tapflo s.r.o.
Tel: +420 513033920
tapflo@tapflo.cz

Denmark
Tapflo Danmark ApS
Tel: +45 36454600
info@tapflo.dk

France
Sarl Tapflo France
Tel: +33188788240
info@tapflo.fr

Hungary
Tapflo Kft.
Tel: +36 30148 8551
office@tapflo.hu

India
Tapflo Fluid Handling India Pvt Ltd.
Tel: +91 9028574063
enquiry@tapflo.in

Ireland
Tapflo Ireland Ltd.
Tel: +353 12011911
info@tapflo.ie

Italy
Tapflo Italia S.r.l.
Tel: +39 0362306528
info@tapfloitalia.com

Japan
Tapflo Japan K.K.
Tel: +81 362403510
tapflojp@tapflo.co.jp

Kazakhstan
Tapflo LLP
Tel: +7 727 327 83 47
sales@tapflo.kz

Kuwait
Tapflo Gulf General Trading Co. L.L.C
Tel: +971 58 582 3630
sales@tapflogulf.com

Netherlands
Tapflo Benelux B.V.
Tel: +31 (0) 6 21850664
info@tapflo.nl

Oman
Tapflo Gulf General Trading Co. L.L.C
Tel: +971 58 582 3630
sales@tapflogulf.com

Poland
Tapflo Sp. z o.o.
Tel: +48 609 995 500
info@tapflo.pl

Qatar
Tapflo Gulf General Trading Co. L.L.C
Tel: +971 58 582 3630
sales@tapflogulf.com

Romania
S.C. Tapflo Rom. S.r.l.
Tel: +40 213451255
sales@tapflo.ro

Saudi Arabia
Tapflo Gulf General Trading Co. L.L.C
Tel: +971 58 582 3630
sales@tapflogulf.com

Serbia
Tapflo d.o.o.
Tel: +381 21445808
sales@tapflo.rs

Slovakia
Tapflo s.r.o.
Tel: +421 911137883
tapflo@tapflo.sk

Slovenia
Tapflo d.o.o.
Tel: +386 68613474
sales@tapflo.hr

Spain
Tapflo Ibérica S.L.
Tel: +34 918093182
avives@tapfloiberica.es

South Africa
Tapflo (Pty) Ltd.
Tel: +27 317015255
sales@tapflo.co.za

Sweden
Tapflo ABTel: +46
(0)30314050info@tapflo.com

Turkey
Tapflo Makina Ltd.
Tel: +90 2164673311
sales@tapflo.com.tr

Ukraine
Tapflo LLC
Tel: +380 442226844
sales@tapflo.ua

United Arab Emirates
Tapflo Gulf General Trading Co. L.L.C
Tel: +971 58 582 3630
sales@tapflogulf.com

United Kingdom
Tapflo (UK) Ltd.
Tel: +44 2380252325
sales@tapflopumps.co.uk

Uzbekistan
Tapflo Uzbekistan
Tel: +998 712370940
sales@tapflo.uz

If your country is not listed please visit www.tapflo.com/en/contact

www.tapflo.com

Tapflo is a registered trademark of Tapflo AB. All rights reserved.

Information in this document is subject to change without notice. Reproduction in any manner without written permission of Tapflo Group is forbidden. Tapflo Group reserves the right to make changes in product design, or detail, and to discontinue any product or material without notice.