IOM manual

tapflo®

TF

Filter-press Diaphragm Pumps

Original Instruction
edition 2019 rev 1

STOP

Read this instruction manual carefully,
before you install and operate the pump

CE



Pump models:

TF50
TF100
TF200
TF400

TF70 S
TF120 S
TF220 S
TF420 S

TF70 A/C
TF120 A/C
TF220 A/C
TF420 A/C

All about your flow

www.tapflo.com

CONTENTS

0. GENERAL 5
0.1. Introduction 5
0.2. Warning symbols 5
0.3. Qualification and training of personnel 5
0.4. Related manuals 6
1. INSTALLATION 7
1.1. Operation principle 7
1.2. Receiving inspection 7
1.3. Lifting and transportation 8
1.4. Storage 8
1.5. Foundation 8
1.6. Suction and discharge piping 8
1.6.1. Rotary connections 9
1.6.2. Connection of suction pipe 9
1.6.3. Connection of discharge pipe 9
1.7. Health and safety 9
1.7.1. Protection 9
1.7.2. Explosion hazardous environments – ATEX 10
1.7.3. Air pressure 10
1.7.4. Noise level 11
1.7.5. Temperature hazards 11
1.7.6. Mixing danger 11
1.8. Air connection 12
1.8.1. Air treatment system 12
1.8.2. Pressure ratio 2:1 12
1.9. Example of installation 12
1.10. Scope of supply 13
2. OPERATION 14
2.1. Before starting the pump 14
2.2. Starting and operation 14
2.2.1. Dry running 14
2.2.2. Optimization of the pump lifetime 14
2.2.3. Booster operation conditions 15
2.3. Pump stopping 15

CONTENTS

2.4. Residual risks 16
2.5. Disposal after expiration of the expected lifetime 16
2.6. Actions in emergency 16
3. MAINTENANCE 17
3.1. When the pump is new or reassembled 17
3.1.1. Performance test 17
3.2. Routine inspection 17
3.3. Complete inspection 17
3.4. Location of faults 18
3.5. TF50-TF400 – Disassembly of the pump (PE & PTFE) 19
3.5.1. Before the disassembly procedure 19
3.5.2. Disassembly procedure 19
3.6. TF50-TF400 – assembly of the pump (PE & PTFE) 22
3.6.1. Test run 23
3.7. TF70 – TF420 – disassembly pf the pump (Stainless Steel) 23
3.7.1. Before the disassembly procedure 23
3.7.2. Disassembly procedure 23
3.8. TF70 – TF420 - assembly of the pump – Stainless Steel 25
3.8.1. Test run 26
3.9. TF70 – TF420 – disassembly pf the pump (A/C) 26
3.9.1. Before the disassembly procedure 26
3.9.2. Disassembly procedure 26
3.10. TF70 – TF420 - assembly of the pump – A/C 28
3.10.1. Test run 29
4. STANDARD AND OPTIONS 30
4.1. Standard 30
4.2. SMC booster 30
4.3. Booster without manometers and regulator 30
4.4. Air treatment system 31
4.5. Pump prepared for booster assembly 31
4.6. Pump with reinforcement plates 32
4.7. Pump with aluminium centre body 32
5. SPARE PARTS 33
5.1. Plastic pumps 33
5.2. Plastic pumps – Additional / other spare parts list 33
5.3. Stainless steel pumps 33

CONTENTS

5.4. Stainless steel pumps – Spare parts list 33
5.5. Aluminium / cast iron pumps 34
5.6. Aluminium / cast iron pumps – Spare parts list 34
5.7. Stocking recommendation 34
5.8. How to order parts 35
5.9. Pump code 35
6. DATA 36
6.1. Capacity curves 36
6.2. Capacity changes 37
6.3. Technical data 38
6.4. Dimensions 39
6.4.1. Plastic pumps 39
6.4.2. Stainless steel pumps 40
6.4.3. Aluminium / cast iron pumps 41
6.5. Tightening torques 42
6.6. Permitted loads on manifolds 42
7. WARRANTY 44
7.1. Warranty form 44
7.2. Returning parts 45
7.3. Warranty 45

EC DECLARATION OF CONFORMITY 01/EC/TF/2017

Series:
TF(…)

Serial numbers:
2013 - … (from 1301-…)

Manufactured by:
Tapflo AB
Filaregatan 4
4434 Kungälv, Sweeden

This declaration of conformity is issued under the sole responsibility of the manufacturer.

Object of declaration: **FILTER PRESS AIR OPERATED DIAPHRAGM PUMPS**

The object of the declaration described above is in conformity with the relevant Union harmonization legislation:

- Directive 2006/42/EC of European Parliament and of the Council of 17 May 2006 on machinery, amending Directive 95/16/EC;

Mr Michał Śmigiel is authorized to compile the technical file.
Tapflo Sp. z o.o.
ul. Czatkowska 4b
83-110 Tczew

Signed for and on behalf of Tapflo AB

Håkan Ekstrand
Managing director

Tapflo AB, 02.03.2017r

0. GENERAL

0.1. Introduction

The Tapflo Air Operated Diaphragm Pump range is a complete series of pumps for industrial applications. The pumps are designed to be safe, simple and easy to use and maintain. The construction is seal-less and without rotating parts. The pumps are suitable for almost all different chemicals used by the industry today.

With proper attention to maintenance, Tapflo Pumps will give efficient and trouble free operation. This instruction manual will familiarise operators with detailed information about installing, operating and maintaining of the pump.

The Tapflo pump for filter press feeding is a very compact unit that can be mounted directly to the filter press. The design and function allows the user a straightforward pressing of slurries.

A pressure regulator is already mounted on the unit. The pumps are based on standard metal and plastic Tapflo pumps. An external pressure booster doubles the delivery pressure. For example, with available air pressure of 7 bar, the delivery pressure will be maximum 14 bar.

When installing, operating and maintaining of the pump unit you must strictly follow the IOM manual. Otherwise injury or life hazard may occur.

0.2. Warning symbols

The following warning symbols are present in this instruction manual. This is what they say:



This symbol stands next to all safety instructions in this instruction manual where danger to life and limb may occur. Observe these instructions and proceed with utmost caution in these situations. Inform also other users of all safety instructions. In addition to the instructions in this instruction manual, the general safety and accident prevention regulations must be observed.



This signal stands at points in this instruction manual of particular importance for compliance with regulations and directives, for correct work flow and for the prevention of damage to and destruction of the complete dampener or its subassemblies.

0.3. Qualification and training of personnel



The personnel in charge of installation, operation and maintenance of the pumps we produce must be qualified to carry out the operations described in this manual. Tapflo shall not be held responsible for the training level of personnel and for the fact that they are not fully aware of the contents of this manual. In case any instructions in this manual are unclear or any information is lacking, please contact Tapflo before handling the pump.

0. GENERAL

0.4. Related manuals

- IOM Manual - PE and PTFE diaphragm pumps
- IOM Manual - Metal series diaphragm pumps

1. INSTALLATION

1. INSTALLATION

1.1. Operation principle

The Tapflo diaphragm pump is driven by compressed air. The two diaphragms are connected by a diaphragm shaft and pushed back and forth by alternately pressurising the air chambers behind the diaphragms using an automatically cycling air valve system.

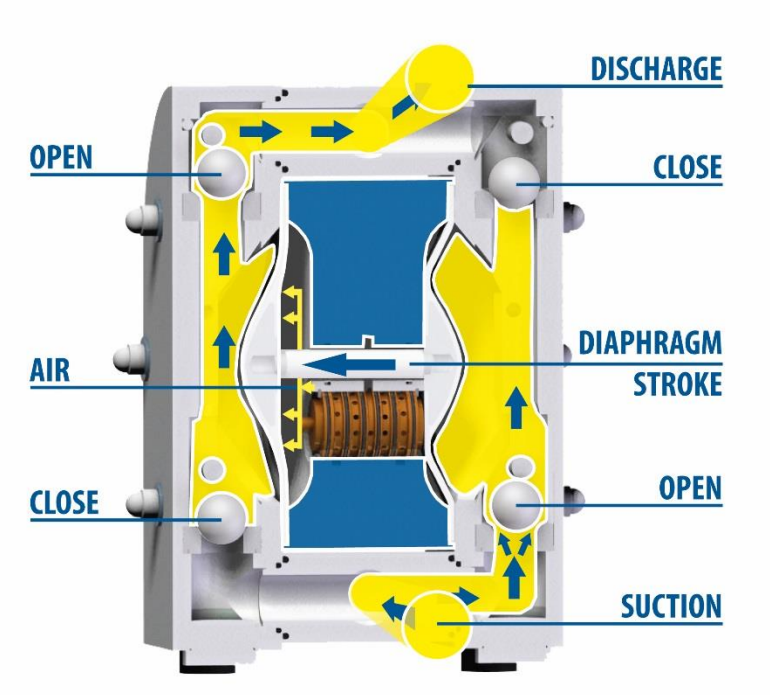

The Suction Cycle:

- **Suction**
  One diaphragm creates a suction action in one chamber (right side) when being pulled back from the housing.
- **Discharge**
  The other diaphragm simultaneously transmits the air pressure to the liquid in the second chamber (left side) of the housing, pushing it towards the discharge port.

During each cycle the air pressure on the back of the discharging diaphragm is equal to the head pressure on the liquid side. Tapflo diaphragm pumps can therefore be operated against a closed discharge valve with no negative effect to the life of the diaphragms.

1.2. Receiving inspection

Although precaution is taken by us when packing and shipping, we urge you to carefully check the shipment on receipt. Make sure that all parts and accessories listed on the packing list are accounted for. Immediately report any damage or shortage to the transport company and to us.

1. INSTALLATION

1.3. Lifting and transportation

Before handling the pump check the weight of the pump (see 6.3. *Technical data*). Refer to Your local standards on how to handle the pump. If the weight is excessive to transport by hand it must be lifted using slings and a suitable lifting device e.g. a crane or forklift.
Always use at least two slings and make sure they are secured in such a way to prevent the pump from slipping and that the pump unit is hanging straight.
Never lift the pump with only one sling. Incorrect lifting can cause serious injury and/or damage to the pump.

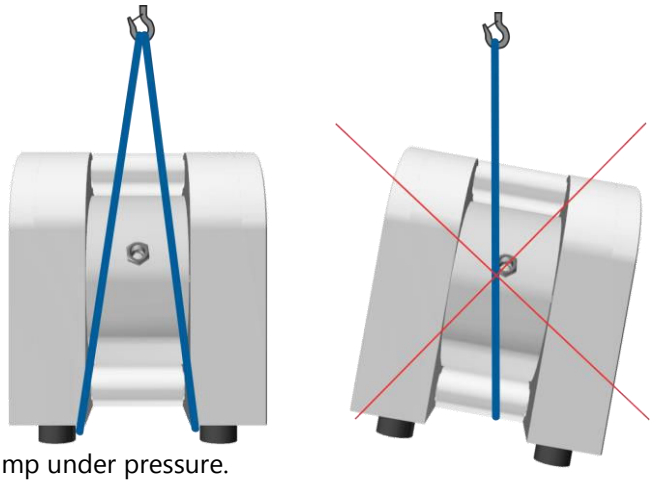

Never lift the pump under pressure.
Be careful that nobody passes under the pump when lifted.
Never try to lift the pump by the manifolds or hoses attached to the pump.
As an option pumps can be equipped with lifting eyebolts connected with the pump pinscrews.

1.4. Storage

If the equipment is to be stored prior to installation, place it in a clean location. The pump should be stored in an ambient temperature of 15°C (59°F) to 25°C (77°F) and relative humidity below 65%. It should not be exposed to any heat source e.g. radiator, sun as this could result in a negative way on the tightness of the pump. Do not remove the protective covers from the suction, discharge and air connections which have been fastened to keep pump internals free of debris. Clean the pump thoroughly before installation.

1.5. Foundation

Plastic pumps are equipped with vibration absorbing rubber feet. The pumps will operate properly without being fixed to a foundation. If fixation is needed for installation purposes, make sure the foundation is able to absorb vibrations. It is essential for the operation of the pump to mount the pump with the feet in a downward direction.

1.6. Suction and discharge piping

Suction and discharge piping should be fully supported and anchored near to but independent of the pump. The piping to the pump should be a hose, to prevent undue stress and strain on the pump connections and the piping.

1. INSTALLATION

1.6.1. Rotary connections

The suction and discharge connections can be rotated 180°. This simplifies the assembly and installation of the pump. If you wish to rotate the connections, the housing nuts must be slightly released, then screw a threaded nipple into the connection and rotate it.
Remember to re-torque the housing nuts after this procedure.

1.6.2. Connection of suction pipe

Remember that the suction pipe/connection is the most critical point, especially if the pump is priming. Just a small leakage will dramatically reduce the suction capability of the pump. When connecting the suction pipe, the following is recommended:

1) For satisfactory operation, use a reinforced hose (the suction power may otherwise shrink the hose) or other flexible piping. The internal diameter of the hose should be the same as on the suction connection (at the bottom of the pump) to have best suction capability. If the diameter of a hose is smaller, it will affect the pump's performance or cause its malfunction.
2) Make sure that the connection between the hose and the pump is completely tight, otherwise the suction capability will be reduced.
3) Always use as short suction pipe as possible. Avoid air pockets which can emerge within long piping.

1.6.3. Connection of discharge pipe

For this connection it is only recommended to have a simple and positive flow connection. Use a hose or flexible piping (minimum one meter) between the discharge connection and any rigid fixed piping. Coil the hose at least one turn. All components (hose, pipe, valves etc.) on the discharge piping must be designed for minimum PN 16.

1.7. Health and safety

The pump must be installed according to local and national safety rules.



The pumps are constructed for particular applications. Do not use the pump on applications different from that for which it was sold without consulting us to ascertain its suitability.

1.7.1. Protection



In the interest of health and safety it is essential to wear protective clothing and safety goggles when operating, and/or working in the vicinity of Tapflo pumps.

1. INSTALLATION

1.7.2. Explosion hazardous environments – ATEX



The standard PE, PTFE and SS series pumps are not allowed to operate in environments where there is danger of explosion. Static electricity may occur in the pump under operation, which may cause explosion and injury. Special conductive TXF pumps are available for such applications. All our aluminium and cast iron pumps are by standard ATEX approved.
Follow below instructions and local/national rules for safe use.



For use in explosion hazardous environment a special booster is required (see chapter 4.2). Booster ATEX classification is **II 3 GD c T6.** Please contact us for more details. As a general rule it is recommended to install the booster outside of the hazardous area.
ATEX (directive 94/9/EC) classification of Tapflo TX pumps:

ATEX II 2 GD IIB c T4

Equipment group:	**II** – all other explosive areas than mines;
Category group:	**2** – high level of protection (can be used in zone 1);
Atmosphere:	**G** – gas;
	D – dust;
Explosion group:	**IIB** – such as ethylene;
Type of protection:	**c** – constructional safety;
Temperature class:	**T4** – in the event of a malfunction, the maximum temperature of a surface that may be exposed to gas **T4** = 135 °C.

Earth connection of the pump and other equipment

Connect a suitable earth wire to the stainless steel earth connection that is placed on the inside of one of the pump housings. Connect the other end of the earth wire to earth and also make sure that other equipment like hoses/pipes/containers etc. are properly earthed/connected.

1.7.3. Air pressure



The maximum air feed pressure for Tapflo TF pumps is **8 bar** for sizes TF50, TF70, TF100 and TF120, **7 bar** for TF220 and TF420 and **6 bar** for sizes TF200 and TF400. This is the air pressure that is supplied to the pressure booster. As a result the pump will be supplied with 16 bar, 14 bar and 12 bar respectively.
To withstand this high pressure the pumps, as a standard, are equipped with a special, hybrid air valve which is equipped with a PET piston and in case of plastic pumps, two stainless steel reinforcement plates.
Higher air pressure can damage the pump and may cause injury to personnel in vicinity of the pump. If you intend to apply a higher air pressure than 8 bar, please consult us.

1. INSTALLATION

1.7.4. Noise level



At tests, the noise level from a Tapflo pump has not exceeded 85 dB(A). Under some circumstances, for example if the pump is operating under high air pressure at low discharge head, the noise can be inconvenient or hazardous for personnel staying for long periods in the vicinity of the pump. This hazard can be prevented by:

- using suitable ear protection;
- lowering the air pressure and/or raising the discharge head;
- leading out the outgoing air from the room by connecting a hose to the muffler connection of the pump;
- using elastomer valve balls (EPDM, NBR or polyurethane) instead of PTFE, ceramic or stainless steel, provided that the elastomer is compatible with the pumped liquid.

1.7.5. Temperature hazards

0

- Raised temperature can cause damage on the pump and/or piping and may also be hazardous for personnel in the vicinity of the pump/piping. Avoid quick temperature changes and do not exceed the maximum temperature specified when the pump was ordered. See also general max temperatures based on water in chapter *5 "DATA"*.



- When the pump is exposed to ambient temperature variations or if there is big difference between the temperature of the product and the surrounding, the tightening torques of the housing nuts should be checked periodically as part of preventive maintenance. **Please contact Tapflo for tightening intervals recommendation.**
- If a hot product is pumped, the pump should not stand still when filled for a longer period of time. This could cause leakage from the valves and contamination and/or damage of the air valve.



- Below 0°C (32°F) plastic materials become more fragile what can cause accelerated wear of parts made of these materials. This is a hazard that has to be accepted when pumping such cold products. Also in such case, when a pump is not operational it should be drained of all liquid.
- Bear in mind that the viscosity of the product changes with temperature. This has to be taken into consideration when selecting the pump.
- The fluid remaining in the connected piping, as well as in the pump itself, may expand because of freezing or heat, which may cause damage to the pump or/and piping, and lead to leakage of the fluid.

1.7.6. Mixing danger



The pumps are tested with water. If the pumped product can come into reaction with water, please make sure the pump is dry before putting it into operation.

1. INSTALLATION

1.8. Air connection

Screw the air hose into the air intake on the booster. For best efficiency, use the same hose diameter as the internal diameter of the connection on the air intake.

1.8.1. Air treatment system

The air valve is constructed for oil-free air. Lubrication of the air is ***not allowed.*** However, if the air is ***very dry*** (laboratory air), we recommend to use a plastic air valve. As prevention purpose, a filtration of the air by means of a 5 micron filter or finer is recommended. Recommended air quality according to PN-ISO8573-1:2010 is particles class 6, water class 4 and oil class 4. Dirt in the air can under unfortunate circumstances be the cause of a breakdown. If a compressor used to generate compressed air is not fitted with an air dryer it is recommended to use a water separator to remove the extent of water from the prepared air.

To facilitate the operation of the pump we recommend an air treatment system connected to the air supply. These components should be included:
1) Regulator to adjust the air pressure;
2) Manometer to read the actual pressure;
3) Needle valve to adjust the air flow (especially when operating the pump in the lower range of performance); It is recommended to install the needle valve between the booster and pump
4) Filter.
These components are included in Tapflo's **Air treatment system** which can be ordered from us.

1.8.2. Pressure ratio 2:1

The pressure booster has the function to transmit the primary pressure (from air supply) to an output pressure of up to twice as much. The pressure ratio between the input and output side is, by default, set to **2:1.**

1.9. Example of installation

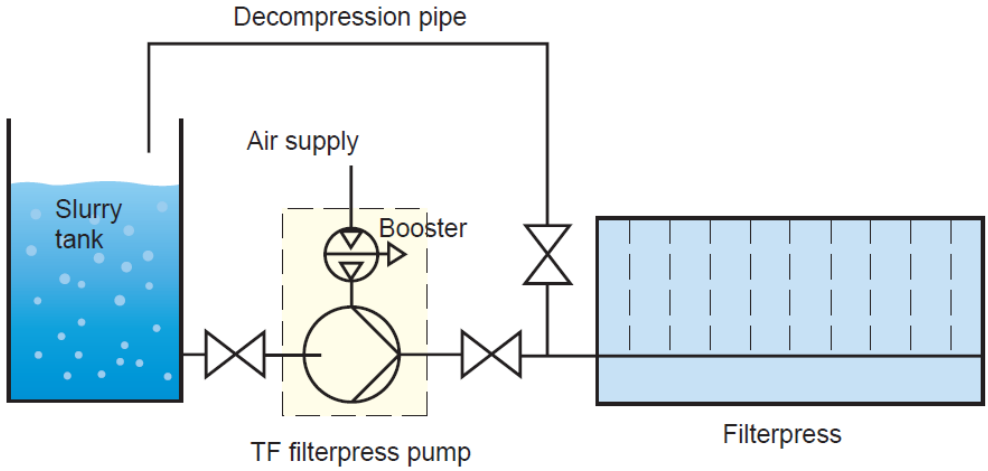

NOTE! **Do not exceed 0,7 bar suction pressure! Higher pressure may cause premature diaphragm failure and irregular pump operation.**

1. INSTALLATION

1.10. Scope of supply

As a standard the pump is supplied with the following items:

1. Complete pressure booster:
    a. Quick air connection for air supply
    b. Muffler
    c. Pressure regulator
    d. Two manometers – input and output pressure
2. Reinforcement plates (plastic pumps only)
3. Mounting plate with screws
4. Air connection between the pump and the booster

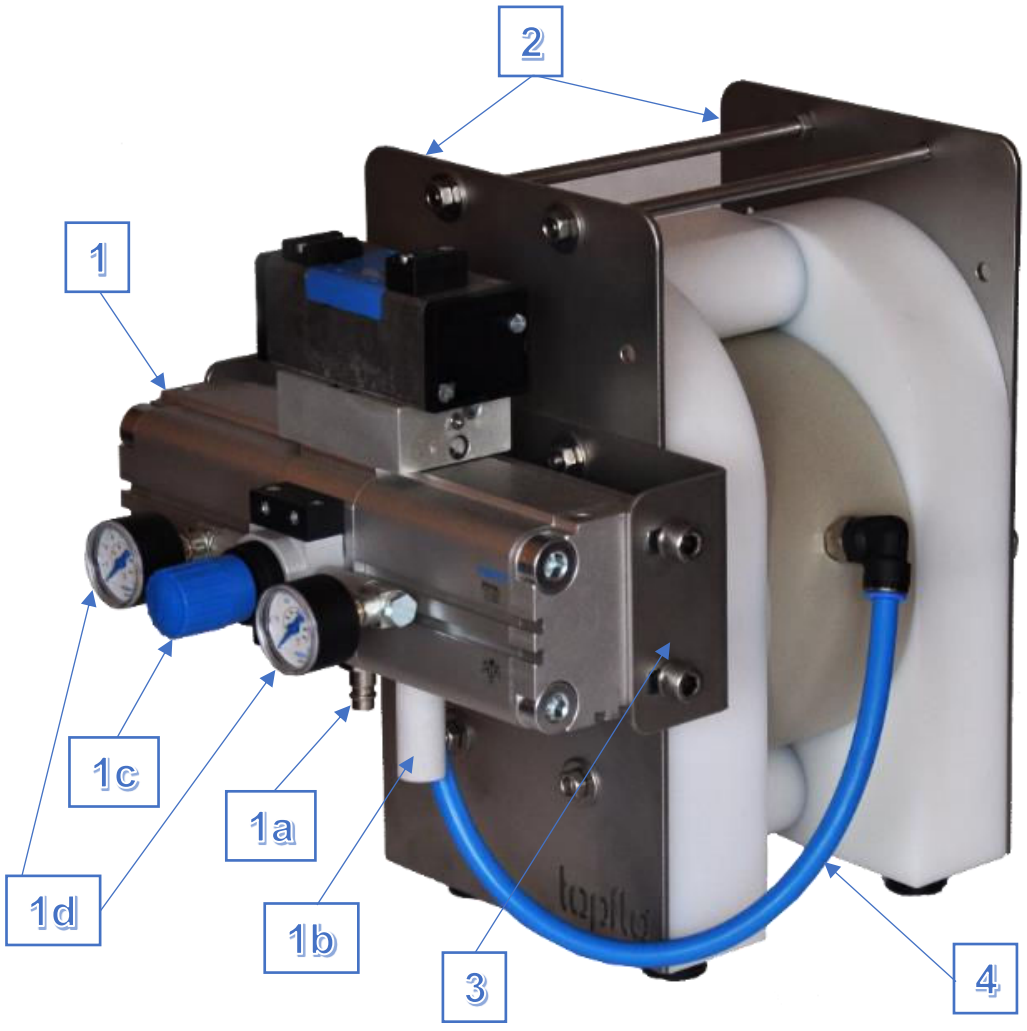



NOTE!

Even if all above safety instructions are met and complied with, there still exists a minor danger in the event of a leakage or mechanical damage of the pump. In such case the pumped product can emerge on sealing areas and connections.

2. OPERATION

2.1. Before starting the pump



- Make sure the pump is installed according to the installation instruction (chapter 1).
- Filling of the pump with liquid before start is not necessary.
- When installation is new or reinstalled, a test run of the pump with water should be conducted to make sure that the pump operates normally and does not leak.



- When installation is new or reinstalled, check the pump housing nuts tightening torque (see chapter *5.5 "Tightening torques"*). After approximately one week of operation, the torque should be checked again. **Please contact Tapflo for further tightening intervals recommendation.** This is important to prevent possible leakage.

2.2. Starting and operation

- Open the discharge valve.
- ***Note! Considering the suction capacity when air is still in the suction pipe, it is recommended to start with low air pressure/flow (slowly) at the beginning. This is not necessary if the pump is filled with liquid before start.***
- When the pump has been filled with liquid, the air pressure/flow may be raised in order to increase the suction capacity of the pump. Remember that suction capacity is higher when pump runs slowly.
- The performance of the pump can be adjusted through the air supply by using a needle valve and a pressure regulator. The performance can also be adjusted by normal flow control on the discharge side of the system.

2.2.1. Dry running

Although the pump is prepared for dry running it is important to have in mind that long periods of dry run may cause damage to the air valve and circlips. What is more, an empty pump should operate at low speeds – controlled by a needle-valve.

2.2.2. Optimization of the pump lifetime

- Running at full frequency (maximum air pressure/flow) continuously will cause premature wear of the components. As a general rule, we recommend to run at half of the maximum capacity of the pump. For instance, a TF100 pump should run continuously at maximum 50 l/min.



- As stated in chapter *1.8.1* Tapflo recommends to use an appropriate air treatment system in order to extend the pump's lifetime.
- If the air humidity is high, use of a water separator or air dryer is recommended. Otherwise on the air discharge side due to decompression, icing on the muffler may appear causing it to shrink and eventually it can shoot out of its socket.

- If the ambient air is humid, icing can occur outside of the muffler. In such case it is recommended to use a longer exhaust of the compressed air (ca. 500 mm / 19,7'').
- If there is possibility of freezing at the air exhaust, it is good to pre-heat the air before it reaches the air intake in order to raise the dew point of the air.
  NOTE! Make sure that the air temperature does not exceed 50°C (122°F).
- If icing / freezing is still a problem with the standard muffler, we recommend using our heavy duty metal muffler. Contact us for more information.
- When the pump is shut down while pumping a liquid containing particles, the particulate matter contained in the liquid will be deposited and get stuck inside the pump chamber. Therefore after finishing work the pump must be emptied of the remaining fluid. Otherwise, when starting the pump again, the diaphragm may get damaged and the shaft may bend leading to grub screw fracture.

2.2.3. Booster operation conditions

In principal the booster is designed for intermittent operation. It cannot be used as a replacement for a compressor. During continuous work the lifetime is significantly decreased due to overheating of the device and increased wear of the seals.

- In order to obtain optimal lifetime it is advised that the discharging frequency be not higher than 0,33 Hz (once pressure discharge per 3 seconds). The exact rest periods cannot be determined generally because they depend on the discharge frequency and heat removal conditions.
- It is recommended that for every hour of booster operation at least a 5 minute rest period is foreseen. If these conditions are difficult or impossible to fulfil, it is recommended to use an air reservoir in the installation.
- To increase the booster lifetime a bypass installation can be used in order to relieve the booster at lower pressures when the filter press is not yet filled.
- Maximum temperature of air supplier to the booster cannot be higher than 25 ºC.
- Recommend air quality is 6:4:4 according to PN-ISO8573-1:2010.

2.3. Pump stopping

The pump can be stopped in two ways:

1) By closing of the discharge valve. The pressure from the system will stop the pump automatically. The pump restarts easily when the valve is opened again. ***NOTE!*** When using this method keep in mind that air must be supplied to the pump. This is essential to keep the diaphragms in balance what protects them from premature failure.

2) By cutting off the air supply.
   NOTE! When using this method make sure that the discharge valve is opened to relief the pumps pressure.

2. OPERATION

2.4. Residual risks

Even with proper application and observance of all points listed in this operating manual, there is still an estimable and unexpected residual risk when using the pumps. It may leak, fail due to wear, application-related causes or system-related circumstances.

2.5. Disposal after expiration of the expected lifetime

The metallic components like aluminium, stainless steel and carbon steel can be recycled. Plastic parts are not recyclable and must be disposed of as residual waste. The pump must be disposed of properly, according to local regulations. It should be noted that potentially dangerous fluid residues may remain in the pump and can create a hazard to the operator or the environment, therefore the pump has to thoroughly cleaned before disposal.

2.6. Actions in emergency

In case of a leakage of an unknown fluid, respiratory protection should be worn and contact with the fluid avoided. During firefighting, no special hazards are to be expected from the pump itself. In addition, the currently handled fluid and the corresponding safety data sheet must be taken into account.
In the event of personal injury, the appropriate emergency number or 112 must be chosen.

3. MAINTENANCE

3.1. When the pump is new or reassembled

If the pump is new or reassembled after maintenance it is important to retighten the pump housing nuts (pos. 37) after one week of operation.

Make sure to use the right torque – *see* chapter *5.5 "Tightening torques"*.

3.1.1. Performance test

When installation is new, a test run of the pump should be conducted. Gauge the capacity at specific air pressure/flow. This information is useful for checking performance in the future as wear takes place. You will be able to set schedules for maintenance of the pump and to select spare parts to be kept on stock.

3.2. Routine inspection

Frequent observation of the pump operation is recommended to detect problems. A change in sound of the running pump can be an indication of wearing parts (see chapter *3.4 "Location of faults"* below).

Leaking liquid from the pump and changes of performance may also be detected. Routine inspections should be conducted frequently.

We recommend to conduct a daily check and keep records of the following:

- Leakage of fluid form any connection of the pump
- Tightness of all connection parts of the pump and any peripheral equipment

In case any of the above is not fulfilled, do not start the pump and implement corrective actions.

Establish a preventive maintenance schedule based on the pump's service history. Scheduled maintenance is especially important to prevent spills or leakage due to diaphragm failure.

3.3. Complete inspection

The intervals for a complete inspection depend upon the operation conditions of the pump. The characteristics of the liquid, temperature, materials used in the pump and running time decide how often a complete inspection is necessary.

If a problem has occurred, or if the pump is in need of a complete inspection, refer to chapters *3.4 "Location of faults"* and *3.5, 3.7 "Dismantling of the pump"*. You are of course warmly welcome to consult us for further help.

Parts that are subject to wear should be kept in stock, see our recommendations in chapter *4.7 "Stocking recommendation"*.

3. MAINTENANCE

3.4. Location of faults

PROBLEM	POSSIBLE ISSUE	POSSIBLE SOLUTION
The pump does not run	The air pressure is to low The air connection is blocked Muffler is blocked Air valve is defective Dirt in the pump chamber Diaphragm breakdown	Increase air pressure via a filter-regulator Check / clean air supply connection Check / clean / replace muffler Clean / replace complete air valve Remove debris from the chambers Replace diaphragm
The suction is bad	Suction connection is not tight Suction connection is blocked Muffler is blocked Valve balls are blocked or damaged Valve seats are worn Pump starts with high pressure Air in suction / discharge line Dry suction against discharge pressure	Tighten the suction line Clean suction line Check / clean / replace muffler Check dimensions and shape of valve balls Check dimensions and shape of valve seats Start the pump slowly (see chapter 2.2) Vent suction / discharge line Wet the pump / start without discharge pressure
The pump runs irregular	Valve balls are blocked Sealing in centre block Air valve is defective Diaphragm breakdown Valve seats are worn Icing on the muffler	Check dimensions and shape of valve balls Replace sealing Clean / replace air valve Replace diaphragm Check dimensions and shape of valve seats Improve air quality (see chapters 1.7.1 and 2.2.2)
Bad flow/pressure	Pressure fall in air supply Pressure losses on suction side Air supply / air valve leaking Suction or air connection blocked Muffler is blocked Valve ball worn or broken Valve seats are worn Air in liquid Diaphragm breakdown Icing on the muffler	Increase air pressure via a filter-regulator Check/change installation on suction side Check / repair / replace air supply / air valve Check / clean air supply / suction connection Check / clean / replace muffler Check dimensions and shape of valve balls Check dimensions and shape of valve seats Seal suction line; check / refill container Check / replace diaphragms Improve air quality (see chapters 1.7.1 and 2.2.2)
Liquid leaks from the pump	Screws on the housing not properly tightened O-rings on manifolds damaged Damaged diaphragm Tension / stress form the installation	Check tightening torques of the screws Replace O-rings Check / replace diaphragms Adjust installation, eliminate stress, when using a dampener provide separate support for it (see dampener IOM manual).
Liquid comes out of the muffler	Diaphragm breakdown	Replace diaphragm
Diaphragm breakdown	Wrong selection of material Too high pressure in the installation Long periods of dry running Too high pressure on suction side	Contact us for information on material selection Use air treatment system for protection When dry, run pump slowly (see chapter 2.2) Make sure there is pressure balance between the air and liquid side of the diaphragm
Booster issues	Too small output pressure Too small flow Booster does not start	Check input pressure; Rotate knob counter-clockwise; Too high air consumption Check if connections are of correct size Booster malfunction / valve in mid-position – contact us for more information

3. MAINTENANCE

3.5. TF50-TF400 – Disassembly of the pump (PE & PTFE)

The numbers put in brackets, refer to the part numbers in the spare part drawings and spare part lists in chapter *4 "SPARE PARTS"*.

3.5.1. Before the disassembly procedure



Be sure to drain all liquid from the pump. Cleanse or neutralize the pump thoroughly. Disconnect the air supply and then the suction and discharge connections.

3.5.2. Disassembly procedure

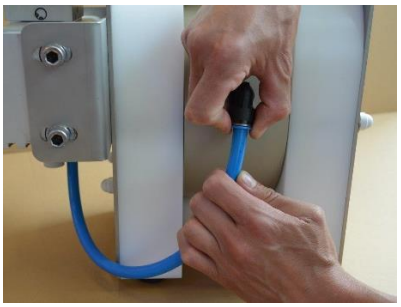

Fig. 3.5.1
Disconnect the air hose from the booster and from the pump.

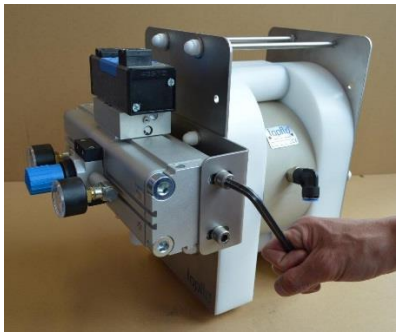

Fig. 3.5.2
Unscrew and remove the booster [99] from the mounting plate [990].



Fig. 3.5.3
Unscrew four nuts [37] holding the mounting plate [990] and remove it from the pump.

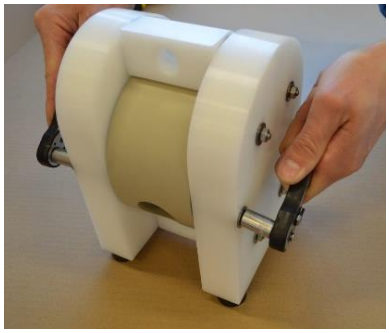

Fig. 3.5.4
Unscrew the remaining nuts [37] and carefully remove the pin screws [147].

3. MAINTENANCE



Fig. 3.5.5
Lay down the pump on one side and lift one of the housings [11].



Fig. 3.5.6
Lift the loose manifolds [13] and centre block [12] from the second housing [11].

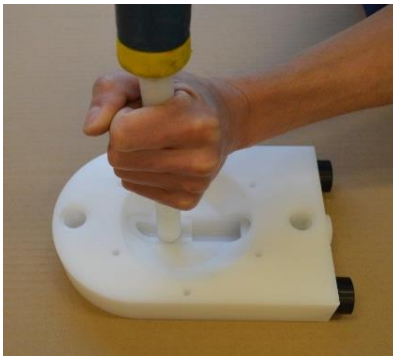

Fig. 3.5.7
To remove the spacer sleeve [19], use a plastic rod and a hammer to knock it out.
NOTE! Be careful not to deform the spacer sleeve.



Fig. 3.5.8
Insert our special tool or pin screw [14] into the orifice in the spacer sleeve [19], rotate it.

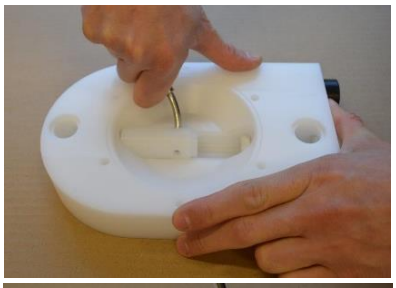

Fig. 3.5.9
Pull out the spacer sleeve [19].



Fig. 3.5.10
Pull out the lower sleeve [212], valve seat [222] and O-ring [43].



Fig. 3.5.11
Pull out the upper sleeve [202] alongside with the valve seat [222], O-ring [43] and the blocking pin [2021].

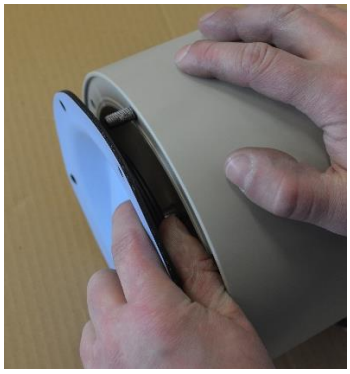

Fig. 3.5.12
Unscrew the diaphragm [15] from one side of the pump.



Fig. 3.5.13
Take out the second diaphragm [15] along with the shaft [16].



Fig. 3.5.14 *TF/TXF50, TF100*
Using pliers remove both circlips [27] from the centre block [12].
Attention! While doing this, cover yourself with your other hand, as the circlip easily flips away



Fig. 3.5.15 *TF/TXF50, TF100*
Press out the air valve [61] by means of a pressing device. Be careful not to damage the brass edges of the air valve.

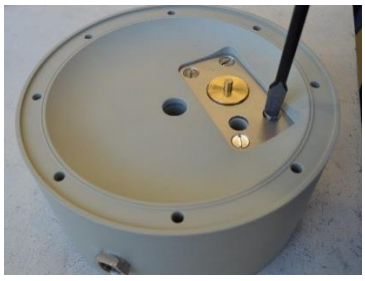

Fig. 3.5.16 *TXF100, TF/TXF200, TF/TXF400*
Unscrew plate screws [2711] from both sides of the centre body [12] and take out the left and right plate [271].

3. MAINTENANCE



Fig. 3.5.17 *TXF100, TF/TXF200, TF/TXF400*
Press out the air valve [61] by means of a pressing device. Be careful not to damage the brass edges of the air valve.

The pump is now completely disassembled. Check all components for wear or damage and replace if necessary.
When air valve is removed from the centre body check the external O-rings (6 x pos. 30) condition and replace if necessary.

3.6. TF50-TF400 – assembly of the pump (PE & PTFE)

The assembly procedure is done in the reverse order to the disassembly.
Nevertheless there are a few things that you have to remember in order to assemble the pump correctly.



Fig. 3.6.1
When putting the air valve [61] into the centre block [12], apply some water or alcohol on the O-rings to provide smooth insertion of the air valve.
It is recommended to use a pressing device for this operation.



Fig. 3.6.2
When there is need to replace the diaphragm pin screw [1652], while screwing it into the diaphragm [15] make sure the pin screw goes all the way.



Fig. 3.6.3
When screwing in the diaphragms [15] on the shaft [16], the holes in the diaphragms must align with the holes in the centre block [12]. Sometimes it is necessary to turn the diaphragm back a little bit in order to align the holes.

3. MAINTENANCE

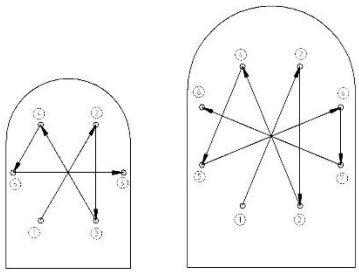

Fig. 3.6.4
When fastening the nuts, remember to do it according to the tightening procedure and with the appropriate torque.
NOTE! After one week of operation retighten the nuts with the appropriate torque.

3.6.1. Test run

We recommend you to conduct a test run of the pump before installing it in the system, so no liquid gets wasted if the pump leaks or perhaps does not start accordingly to wrong assembly of the pump.
After one week of operation retighten the nuts with appropriate torque.

3.7. TF70 – TF420 – disassembly pf the pump (Stainless Steel)

The numbers put in brackets, refer to the part numbers in the spare part drawings and spare part lists in chapter *4 "SPARE PARTS"*.

3.7.1. Before the disassembly procedure

Be sure to drain all liquid from the pump. Cleanse or neutralize the pump thoroughly. Disconnect the air supply and then the suction and discharge connections.

3.7.2. Disassembly procedure



Fig. 3.7.1
Disconnect the air hose from the pressure booster and from the pump's air intake.

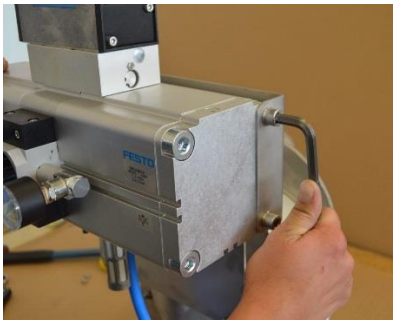

Fig. 3.7.2
Unscrew and remove the booster from the mounting plate [990].

3. MAINTENANCE



Fig. 3.7.3
Unscrew and remove four nuts and take off the mounting plate [990].

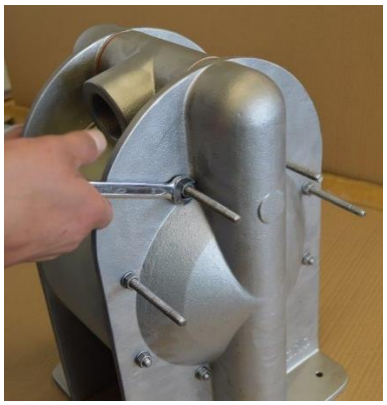

Fig. 3.7.4
Unscrew the housing nuts [37].
Carefully remove the "loose housing" [11] and lift of the in/outlets [13]. Pull up the centre block assembly.
NOTE! Be careful not to damage he diaphragms against the pin screw thread.



Fig. 3.7.5
Unscrew the allen screws [227] from ball stop assemblies [22]. Carefully remove the screws and the half rods.

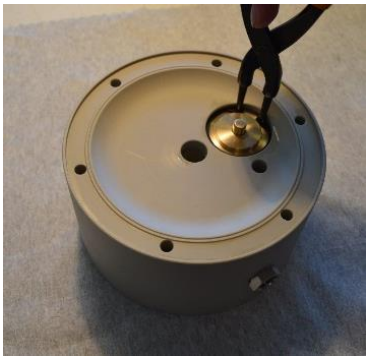

Fig. 3.7.6 *TF/TXF 70; TF120*
Using pliers remove both circlips [27] from the centre block [12].
Attention! While doing this, cover yourself with your other hand, as the circlip easily flips away



Fig. 3.7.7 *TF/TXF 70; TF120*
Press out the air valve [61] by means of a pressing device. Be careful not to damage the brass edges of the air valve.

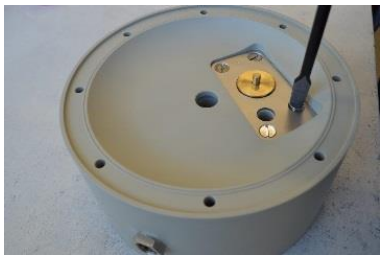

Fig. 3.7.8 *TXF 120; TF/TXF 220; TF/TXF 420*
Unscrew the plate screws [2711] from both sides of the centre body [12] and take out the left and right plate [271].



Fig. 3.7.9 *TXF 120; TF/TXF 220; TF/TXF 420*
Press out the air valve [61] by means of a pressing device. Be careful not to damage the brass edges of the air valve.

The pump is now completely disassembled. Check all components for wear or damage and replace if necessary.
When air valve is removed from the centre body, the external O-rings (6 x pos. 30) have to be replaced before assembly.

3.8. TF70 – TF420 - assembly of the pump – Stainless Steel

The assembly procedure is done in the reverse order to the disassembly.
Nevertheless there are a few things that you have to remember in order to assemble the pump correctly.



Fig. 3.8.1
When putting the air valve [61] into the centre block [12], apply some water or alcohol on the O-rings to provide smooth insertion of the air valve. It is recommended to use a pressing device for this operation.



Fig. 3.8.2
When there is need to replace the diaphragm pin screw [1652], while screwing it into the diaphragm [15] make sure the pin screw goes all the way.



Fig. 3.8.3

When screwing in the diaphragms [15] on the shaft [16], the holes in the diaphragms must align with the holes in the centre block [12]. Sometimes it is necessary to turn the diaphragm back a little bit in order to align the holes.

When putting in the pin screws [14] take extra care not to damage the diaphragms [15] with the pin screw thread.

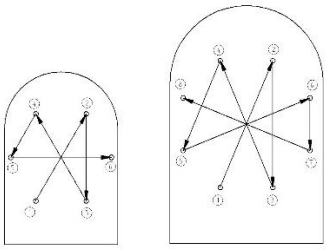

Fig. 3.8.4

When fastening the nuts, remember to do it according to the tightening procedure and with the appropriate torque.

NOTE! After one week of operation retighten the nuts with the appropriate torque.

3.8.1. Test run

We recommend you to conduct a test run of the pump before installing it in the system, so no liquid gets wasted if the pump leaks or perhaps does not start accordingly to wrong assembly of the pump.

After one week of operation retighten the nuts with appropriate torque.

3.9. TF70 – TF420 – disassembly pf the pump (A/C)

The numbers put in brackets, refer to the part numbers in the spare part drawings and spare part lists in chapter *4 "SPARE PARTS"*.

3.9.1. Before the disassembly procedure

Be sure to drain all liquid from the pump. Cleanse or neutralize the pump thoroughly. Disconnect the air supply and then the suction and discharge connections.

3.9.2. Disassembly procedure

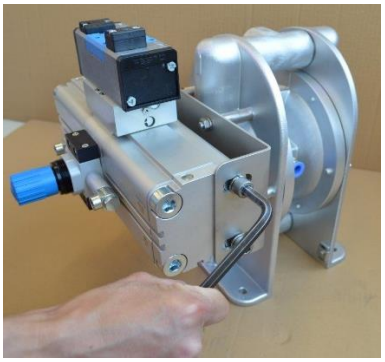

Fig. 3.9.1

Unscrew and remove the booster from the mounting plate [990].

3. MAINTENANCE



Fig. 3.9.2
Unscrew and remove four nuts and take off the mounting plate [990].



Fig. 3.9.3
Unscrew four pins [147] from the pump casing [11].



Fig. 3.9.4
Unscrew the rest of the screws [37] from one side of the pump housing [11]. Carefully lift off the housing. Take off the manifolds[13]. Turn the pump around and unscrew the second housing.



Fig. 3.9.5
In order to take out the valve balls [23] unscrew the valve ball stop [22] from the housing.

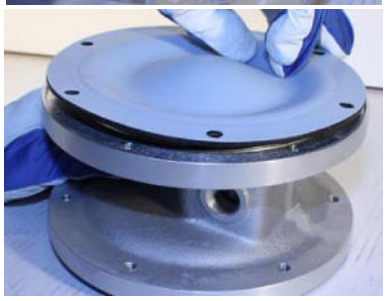

Fig. 3.9.6
Unscrew one of the diaphragms [15] while pressing the other one towards the centre block. Then pull out the second diaphragm with the diaphragm shaft [16]

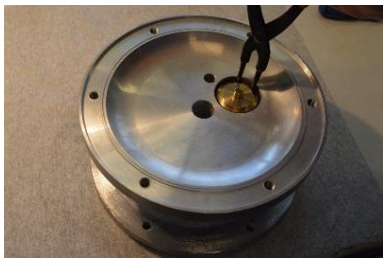

Fig. 3.9.7
Using pliers remove both circlips [27] from the centre block [12].
Attention! While doing this, cover yourself with your other hand, as the circlip easily flips away.

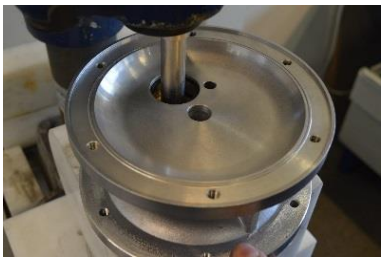

Fig. 3.9.8
Press out the air valve [61] by means of a pressing device. Be careful not to damage the brass edges of the air valve.

The pump is now completely disassembled. Check all components for wear or damage and replace if necessary.
When air valve is removed from the centre body, the external O-rings (6 x pos. 30) have to be replaced before assembly.

3.10. TF70 – TF420 - assembly of the pump – A/C

The assembly procedure is done in the reverse order to the disassembly.
Nevertheless there are a few things that you have to remember in order to assemble the pump correctly.



Fig. 3.10.1
When putting the air valve [61] into the centre block [12], apply some water or alcohol on the O-rings to provide smooth insertion of the air valve. It is recommended to use a pressing device for this operation.



Fig. 3.10.2
When there is need to replace the diaphragm pin screw [1652], while screwing it into the diaphragm [15] make sure the pin screw goes all the way.

3. MAINTENANCE



Fig. 3.10.3

When screwing in the diaphragms [15] on the shaft [16], the holes in the diaphragms must align with the holes in the centre block [12]. Sometimes it is necessary to turn the diaphragm back a little bit in order to align the holes. When putting in the pin screws [14] take extra care not to damage the diaphragms [15] with the pin screw thread.

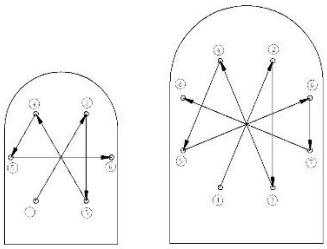

Fig. 3.10.4

When fastening the screws, remember to do it according to the tightening procedure and with the appropriate torque.

NOTE! After one week of operation retighten the screws with the appropriate torque.

3.10.1. Test run

We recommend you to conduct a test run of the pump before installing it in the system, so no liquid gets wasted if the pump leaks or perhaps does not start accordingly to wrong assembly of the pump.

After one week of operation retighten the screws with appropriate torque.

4. OPTIONS

4. STANDARD AND OPTIONS

4.1. Standard

As a standard Tapflo TF pump is equipped with a Festo pressure booster equipped in two manometers and a pressure regulator. By using the knob we can regulate the output pressure. Maximum pressure increase is 2:1. Differential pressure must be at least 2 bar.

Art. No	Pumps
6-050-99	TF50, TF70
6-100-99	TF100, TF120
6-200-99 6-400-99	TF200, TF220 TF400, TF420

4.2. SMC booster

If the client should require we offer also SMC boosters as alternative. SMC offers also ATEX marked boosters which can be used in zone 2:



ATEX II 3 GD c T6

If you wish to order TF pump with SMC booster please use "19S" at the end of the pump code, e.g. *TF120 STT-19S*.

IMPORTANT! The SMC boosters for pump sizes T100, T200 and T400 are rated only up to 10 bar.

Additional / different parts:

Art. No	Pumps		Art. No	Pumps
6-050-99 SMC	TF50, TF70		6-050-99 SMC X	TF50, TF70
6-100-99 SMC	TF100, TF120		6-100-99 SMC X	TF100, TF120
6-200-99 SMC 6-400-99 SMC	TF200, TF220 TF400, TF420		6-200-99 SMC X 6-400-99 SMC X	TF200, TF220 TF400, TF420

4.3. Booster without manometers and regulator

If a client's air supply line is already equipped with air treatment system (filter-regulator, manometers etc.) it is possible to order the pump with "plain" booster without additional equipment. In such case, the output pressure is always doubled in comparison to input pressure.



For this option, please use "19D" in pump code, e.g. *TF100 PTT-19D*.

Additional / different parts:

Art. no	Pumps
6-050-99-D	TF50, TF70
6-100-99-D	TF100, TF120
6-200-99-D 6-400-99-D	TF200, TF220 TF400, TF420

4. OPTIONS

4.4. Air treatment system

If one decides to order booster without additional equipment, we can offer air treatment systems as alternative:

Art. no	Pumps	Description
6-100-001FX	TF50, TF70, TF100, TF120	Filter-regulator + manometer + mounting bracket + needle valve
6-200-001FX	TF200, TF220	Filter-regulator + manometer + mounting bracket + needle valve
6-400-001FX	TF400, TF420	Filter-regulator + manometer + mounting bracket + needle valve
6-100-0FX	TF50, TF70, TF100, TF120	Needle valve
6-200-0FX	TF200, TF220	Needle valve
6-400-0FX	TF400, TF420	Needle valve
6-100-002FX	TF50, TF70, TF100, TF120	Filter-regulator + manometer + needle valve+ water separator + mounting bracket
6-200-002FX	TF200, TF220,	Filter-regulator + manometer + needle valve+ water separator + mounting bracket
6-400-002FX	TF400, TF420	Filter-regulator + manometer + needle valve+ water separator + mounting bracket

4.5. Pump prepared for booster assembly

Tapflo pumps can be fitted only with reinforcement plates prepared for booster assembly but without the booster itself. The pump will also have assembled the hybrid air valve with PET piston. This way the pump is prepared for high pressure applications and the end user can install the booster on the pump by himself.

For this option, please use "11F" in pump code, e.g. *T100 PTT-11F*.



4. OPTIONS

4.6. Pump with reinforcement plates



Tapflo pumps can be supplied only with plain, stainless steel reinforcement plates to make the construction more robust. This way the pump is prepared for high pressure applications and the end user can supply the pump with compressed air from his installation.
For this option, please use "11S" in pump code, e.g. *T100 PTT-11S*.

4.7. Pump with aluminium centre body



To increase pump lifetime for high applications we recommend to use pumps with aluminium centre body. This material is more resistant to high pressure than our standard PP.
For this option, please use "6A" in pump code, e.g. *T100 PTT-6A*.

5. SPARE PARTS

5. SPARE PARTS

5.1. Plastic pumps

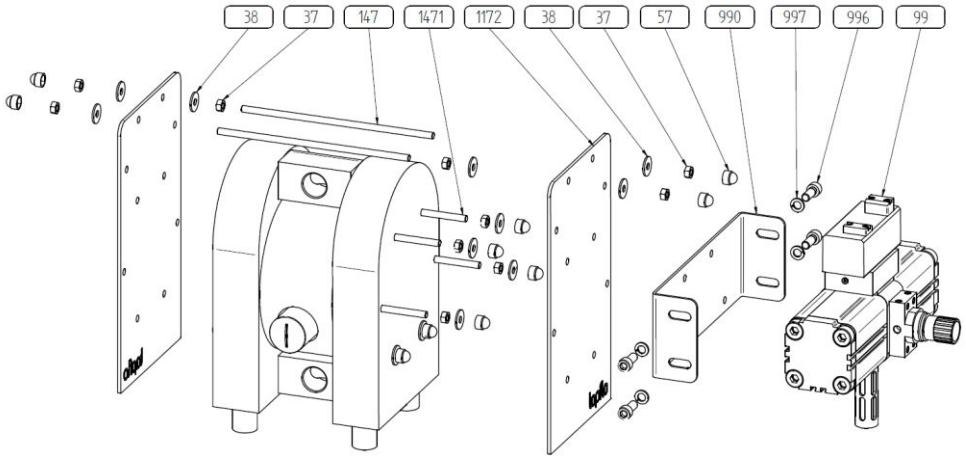

5.2. Plastic pumps – Additional / other spare parts list

Pos.	Q-ty	Description	Material
99	1	Booster	-
990	1	Booster mounting plate	AISI 304
996	4	Booster mounting screw	A4-70
997	4	Booster mounting washer	A4-80
1171	2	Reinforcement plate	AISI 304
37	6	Additional nuts	A4-70
38	6	Additional washers	A4-70
57	4	Additional nut cover	PE
147	4	Pin screws for TF pump (shorter)	A4-80
1471	4	Pin screws for TF pump (longer)	A4-80

5.3. Stainless steel pumps

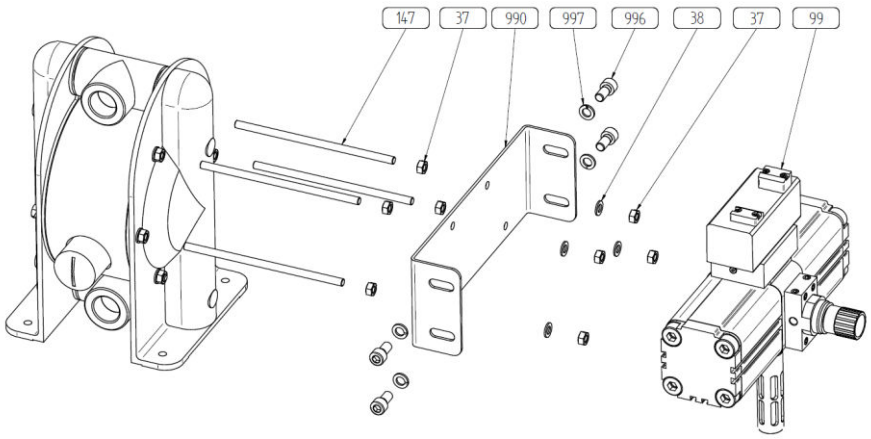

5.4. Stainless steel pumps – Spare parts list

Pos.	Q-ty	Description	Material
99	1	Booster	-
990	1	Booster mounting plate	AISI 304
996	4	Booster mounting screw	A4-70
997	4	Booster mounting washer	A4-80
37	8	Additional nuts	A4-70
38	4	Additional washers	A4-70
147	4	Pin screws with long thread	A4-80

5. SPARE PARTS

5.5. Aluminium / cast iron pumps

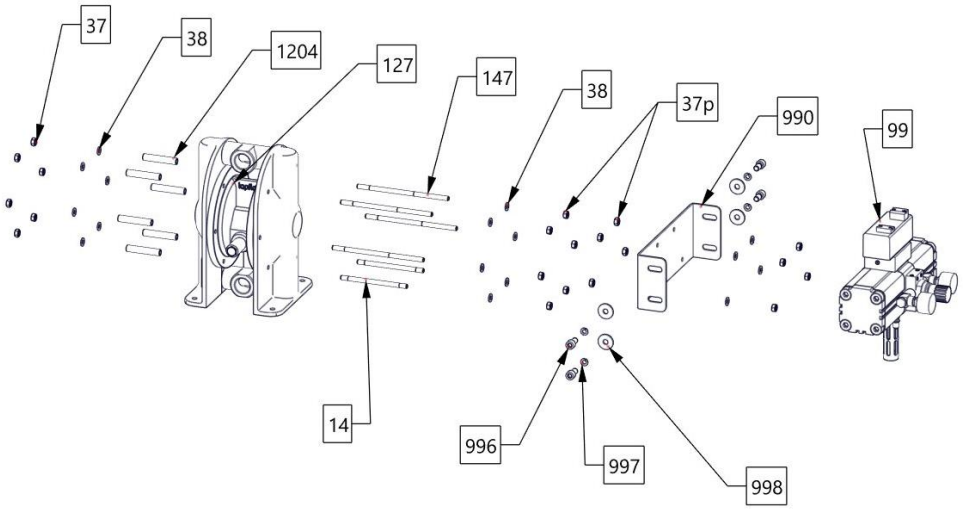

5.6. Aluminium / cast iron pumps – Spare parts list

Pos.	Q-ty	Description	Material
99	1	Booster	-
990	1	Booster mounting plate	AISI 304
996	4	Booster mounting screw	A4-70
997	4	Booster mounting washer	A4-80
998	4	Booster mounting washer	A4-80
37	4	Additional nuts	A4-70
38	4	Additional washers	A4-70
1204	6	Pin screw sleeve	AISI 316L
127	1	Centerblock TF version	Aluminium
147	4	Special pin screw	AISI 316L

5.7. Stocking recommendation

Even at normal operation some elements in the pump will be worn. In order to avoid expensive breakdowns we recommend having a few spare parts in stock.

Depending on the severity of the operation and the importance of assuring continuous work we offer three different spare part for plastic pumps: ***KIT LIQ*** and ***KIT VAL*** includes parts on pump wetted side, ***KIT AIR*** includes parts on the pump air side and that are subject to wear and two spare part kits for metal pumps: ***KIT LIQ*** and ***KIT AIR***. Please refer to specific series IOM manual for further details on the contents of each KIT and contact Tapflo for KIT pricing.

It is also available to purchase spare part KITs for our FESTO pressure boosters:

SET	Description	Contents
KIT 6-050-99	Set of wearing parts	Piston module, retaining rings, seals and O-rings, sliding piece, compression spring, perforated disk
KIT 6-100-99	Set of wearing parts	O-rings and seals, countersunk screw, lip ring, retaining rings, distance sleeves, cone, compression spring, , sealing piston, guiding band
KIT 6-200-99	Set of wearing parts	O-rings and seals, lip ring, retaining rings, cone, compression spring, , sealing piston, guiding band, stop, cartridge

5. SPARE PARTS

5.8. How to order parts

When ordering spare parts for Tapflo pumps, please let us know what is the ***model number*** and ***serial number*** from the pump centre body or housing. Then just indicate the part numbers from the spare parts list and quantity of each item.

5.9. Pump code

The model number on the pump and on the front page of this instruction manual tells the pump size and materials of the pump.

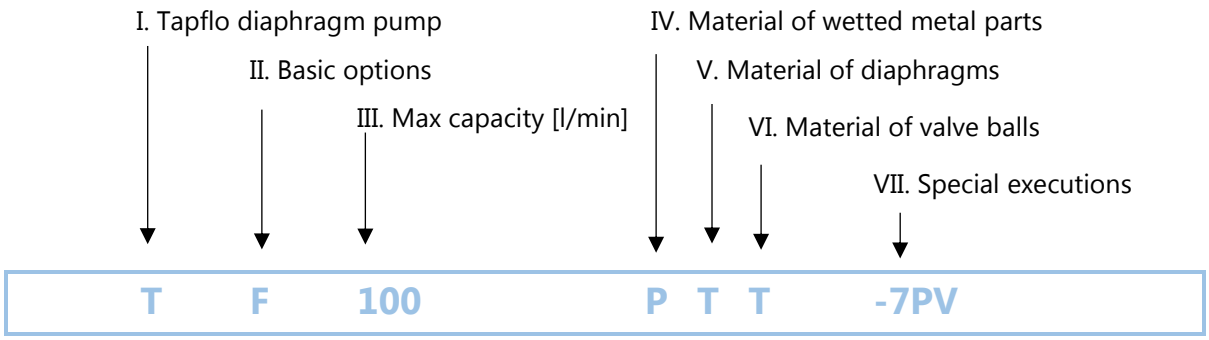

I. T = Tapflo diaphragm pump

II. Basic options:
- B = Backup diaphragm pump
- D = Drum pump
- F = Filter-press pump
- T = Twin inlet/outlet pump
- X = ATEX approved, group II, cat. 2

IV. Material of wetted metal parts:
- P = PE
- T = PTFE
- S = Stainless steel AISI316L
- A = Aluminium
- C = Cast Iron

V. Material of diaphragms:
- E = EPDM
- N = NBR (nitrile rubber)
- T = PTFE
- B = PTFE TFM 1705b
- V = FKM (T50 and T70 only)

VI. Material of valve balls:
- E = EPDM
- N = NBR (nitrile rubber)
- T = PTFE
- S = AISI 316 stainless steel
- P = PU (polyurethane)
- K = Ceramic
- V = FKM
- B = PTFE TFM 1635

VII. Special executions:
- 1 = Optional in/outlet material
- 2 = Valve seat insert
- 3 = Optional connection type
- 4 = Backup diaphragm system configuration
- 5 = Other special executions
- 6 = Optional material of centre body
- 7 = Optional material of air valve
- 8 = Optional material of pos. 18 seals
- 9 = Optional material of housing pin screws
- 11 = Housing reinforcement plates
- 13 = Twin in-/outlet options
- 14 = Optional pump feet
- 19 = Filter press pumps special options

6. DATA

6.1. Capacity curves

The performance curves are based on water at 20°C. Other circumstances might change the performance. See below how the capacity will change at different viscosities and suction lifts.

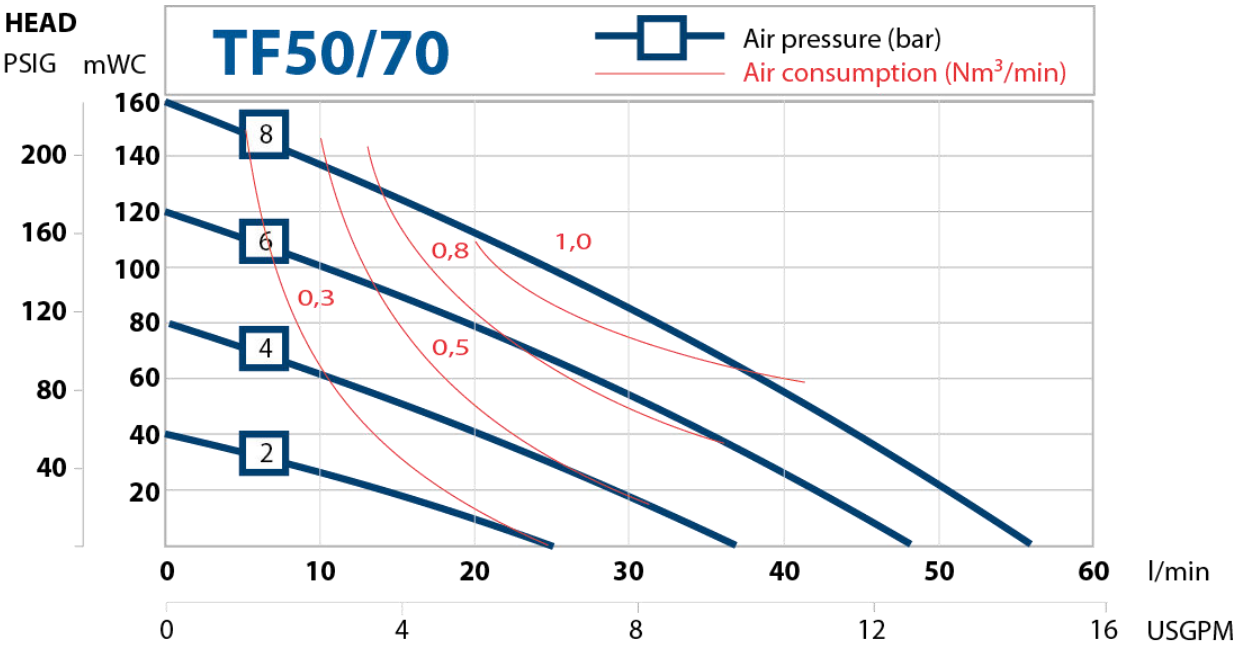

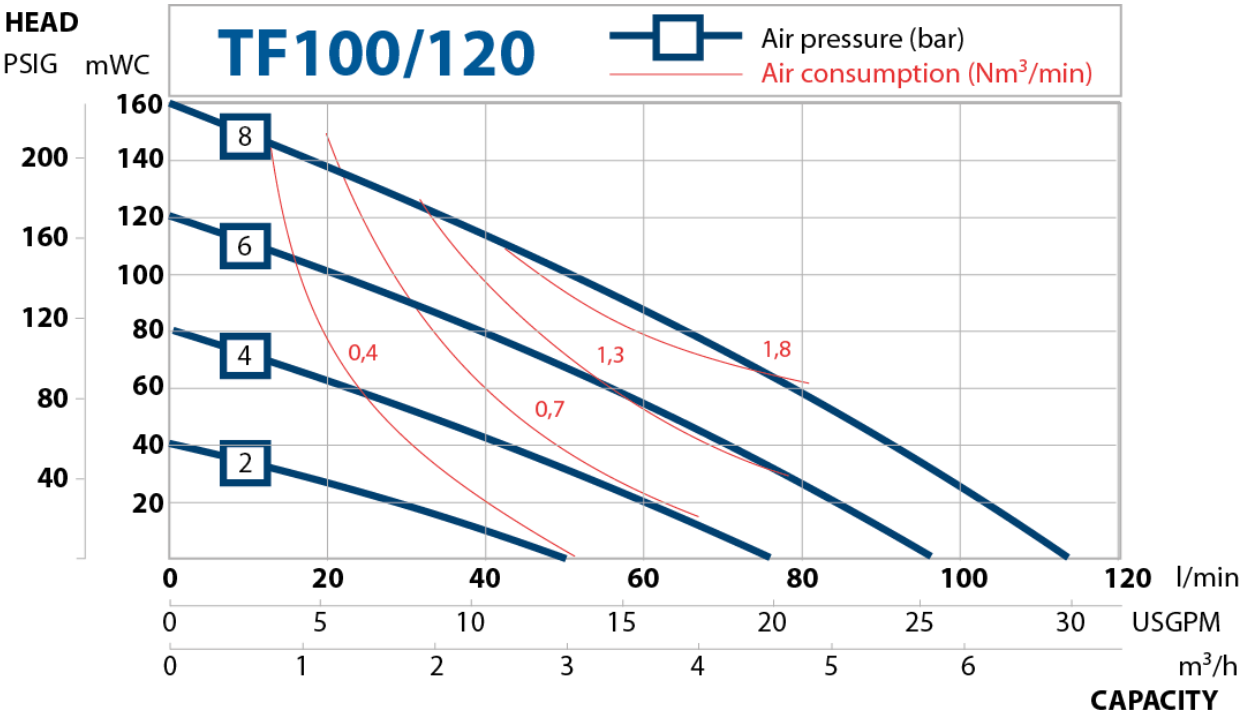

6. DATA

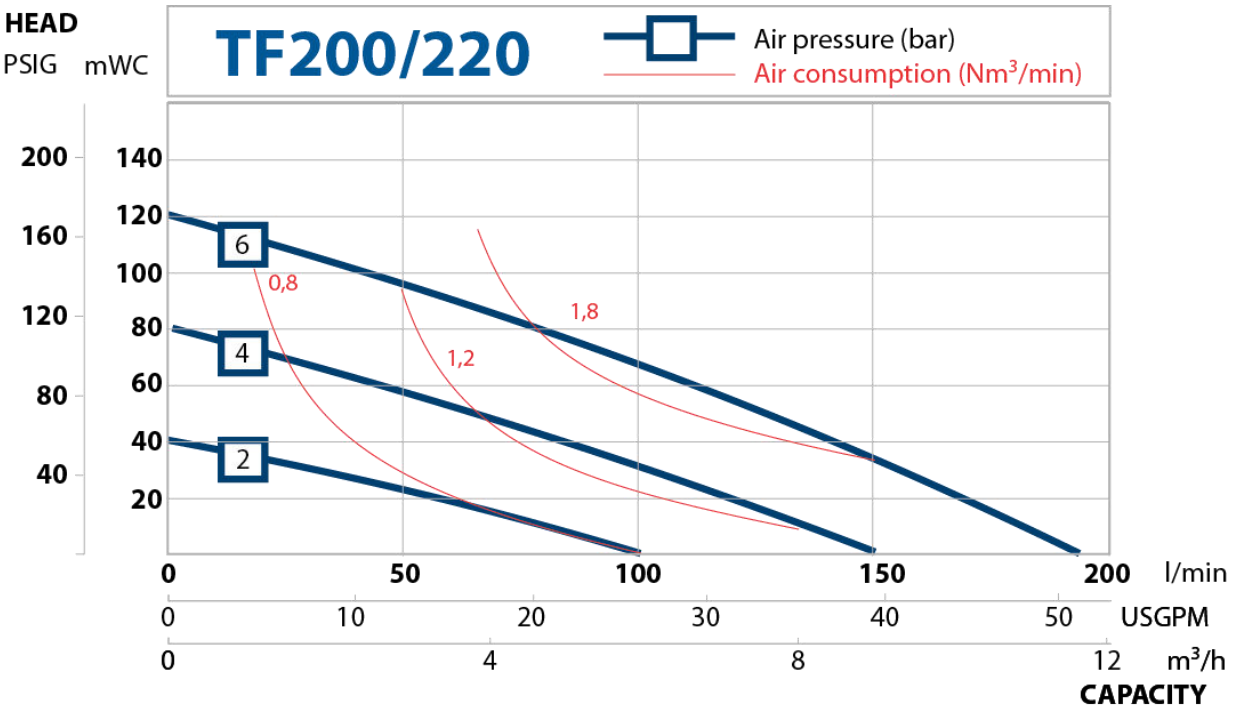

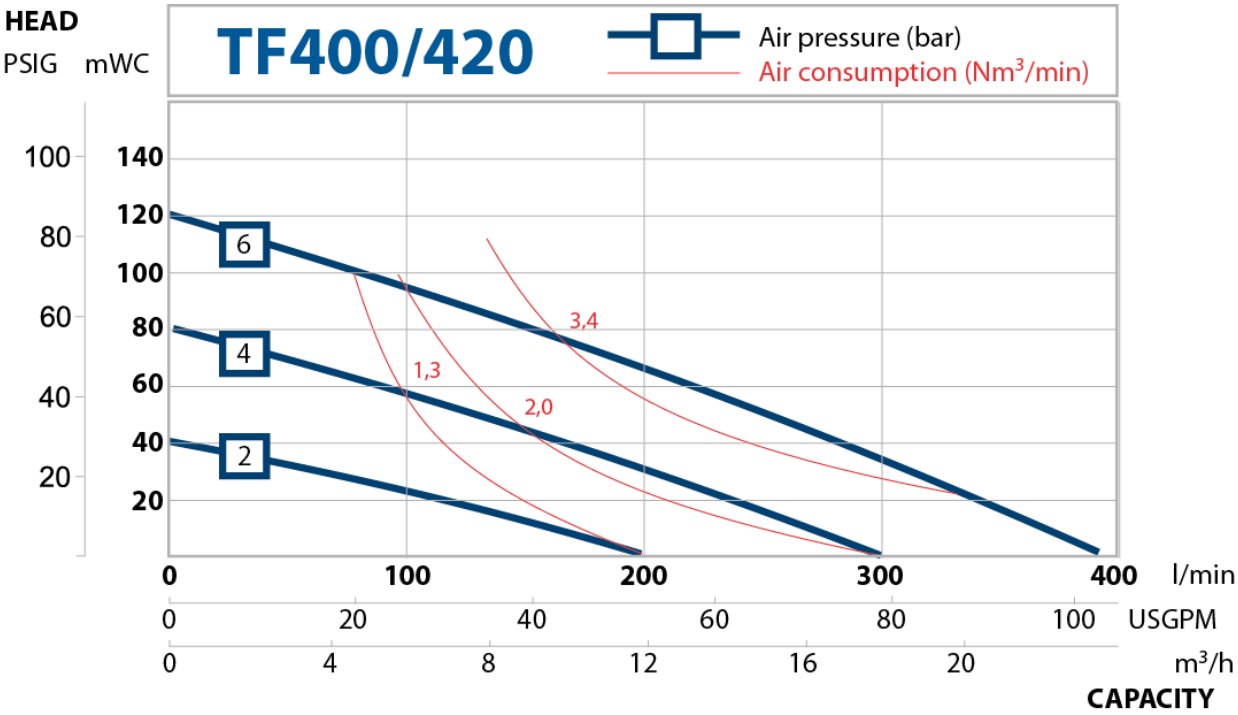

Recommended flow is half of the max flow, e.g. recommended flow for a TF50 is 25 l/min.

6.2. Capacity changes

Capacity changes at different suction lifts

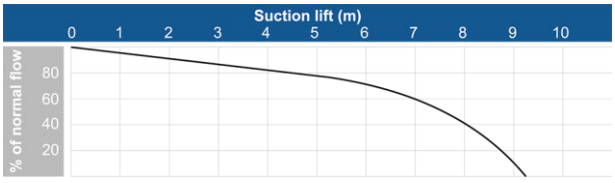

Capacity changes at different viscosities

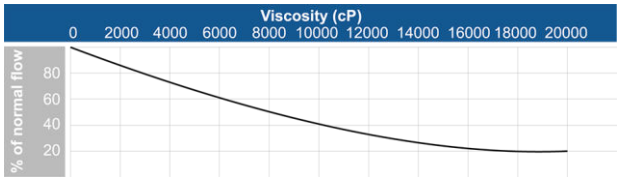

6. DATA

6.3. Technical data

TECHNICAL DATA	PUMP SIZE			
	TF50	TF100	TF200	TF400
Max capacity* [l/min] / [US GPM]	55 / 14.5	110 / 29	200 / 53	400 / 106
Volume per stroke** [ml] / [cu in]	116 / 7.08	305 / 18.6	854 / 52.1	2326 / 141.9
Max discharge pressure [bar] / [psi]	16 / 232	16 / 232	12 / 174	12 / 174
Max air pressure [bar] / [psi]	8 / 116	8 / 116	6 / 87	6 / 87
Max suction lift dry*** [m] / [Ft]	2.5 / 8	3.5 / 11	4 / 13	4 / 13
Max suction lift wet [m] / [Ft]	8 / 26	8 / 26	8 / 26	8 / 26
Max size of solids ø in [mm] / [in]	4 / 0.16	6 / 0.24	10 / 0.39	15 / 0.59
Max temp. pump in PE [°C] / [°F]	70 / 158	70 / 158	70 / 158	70 / 158
Weight of pump in PE [kg] / [lb]	8 / 17.6	21.6 / 47.6	49 / 108	78 / 172

TECHNICAL DATA	PUMP SIZE			
	TF70	TF120	TF220	TF420
Max capacity* [l/min] / [US GPM]	55 / 14.5	110 / 29	200 / 53	400 / 106
Volume per stroke – stainless steel** [ml] / [cu in]	101 / 6.16	304 / 18.55	962 / 58.70	2480 / 151.34
Volume per stroke - aluminium** [ml] / [cu in]	105 / 6.41	272 / 16.60	884 / 53.95	2440 / 148.90
Max discharge pressure [bar] / [psi]	16 / 232	16 / 232	14 / 203	14 / 174
Max air pressure [bar] / [psi]	8 / 116	8 / 116	7 / 101.5	7 / 87
Max suction lift dry*** [m] / [Ft]	3 / 9.8	4 / 13	4 / 13	4 / 13
Max suction lift wet [m] / [Ft]	8 / 26	8 / 26	8 / 26	8 / 26
Max size of solids ø in [mm] / [in]	4 / 0.16	6 / 0.24	10 / 0.39	15 / 0.59
Max temperature with EPDM/NBR [°C] / [°F]	80 / 176	80 / 176	80 / 176	80 / 176
Max temperature with PTFE [°C] / [°F]	110 / 230	110 / 230	110 / 230	110 / 230
Weight in aluminium [kg] / [lb]	11 / 24.3	16.3 / 35.9	35 / 77.2	51.6 / 113.8
Weight in AISI 316 [kg] / [lb]	16 / 35.3	23.5 / 51.8	51.6 / 113.8	69 / 152.1

* = Max flow is obtained when using a bypass around the pressure booster at low pressure.

** = Based on pumps with PTFE diaphragms. Pumps with EPDM diaphragms have higher volume per stroke.

*** = With stainless steel valve balls, other materials may reduce suction. Please consult us in this matter.

6. DATA

6.4. Dimensions

Dimensions in mm (where other is not indicated)
Dimensions in inch (where other is not indicated)
General dimensions only, ask us for detailed drawings. Changes reserved without notice.

6.4.1. Plastic pumps

DIM	PUMP SIZE			
	50	100	200	400
A	172	319	398	398
	6.77	12.56	15.67	15.67
A2	150	200	270	350
	5.91	7.87	10.63	13.78
A3	167	274	341	405
	6.57	10.79	13.43	15.94
B2	196	260	360	436
	7.72	10.24	14.17	17.17
B3	276	444	620	691
	10.87	17.48	24.41	27.20
D2	343	364	500	610
	10.35	14.33	19.69	24.02
D4	352	351	501	583
	13.86	13.82	19.72	22.95
F	15	15	30	30
	0.59	0.59	1.18	1.18
G	116	140	210	290
	4.57	5.51	8.27	11.42
H2	130	155	254	322
	5.12	6.10	10.00	12.68
I	20	28	38	48
	0.79	1.10	1.50	1.89
I2	190	252	345	440
	7.48	9.92	13.58	17.32
J	1/2"	1"	1 1/2"	2"
	1/2	1	1 1/2	2
K	25	38	54	70
	7.48	9.92	13.58	17.32
L	M8x25	M8x25	M8x25	M8x25
	M8x20	M8x20	M8x20	M8x20
M	G1/8" / DN10	G1/4" / DN10	G1/2" / DN10	G1/2" / DN10
	G1/8 / DN10	G1/4 / DN10	G1/2 / DN10	G1/2 / DN10

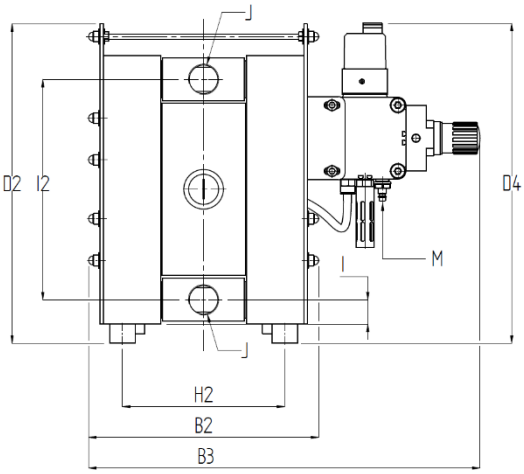

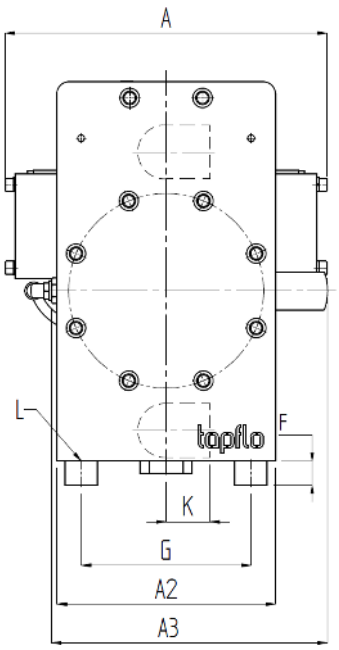

6. DATA

6.4.2. Stainless steel pumps

DIM	PUMP SIZE			
	70	120	220	420
A	172	319	398	398
	6.77	12.56	15.67	15.67
A2	150	200	272	352
	5.91	7.87	10.71	13.86
A3	160	239	342	389
	6.30	9.41	13.46	15.31
B2	156	205	282	347
	6.14	8.07	11.10	13.66
B3	253	407	560	624
	9.96	16.02	22.05	24.57
D2	229	309	422	529
	9.02	12.17	16.61	20.83
D4	165	332	464	551
	6.50	13.07	18.27	21.69
G	116	160	210	280
	4.57	6.30	8.27	11.02
H2	129	158	214	284
	5.08	6.22	8.43	11.18
I	19	27	38	44
	0.75	1.06	1.50	1.73
I2	192	257	348	443
	7.56	10.12	13.70	17.44
J	1/2"	1"	1 1/2"	2"
	1/2	1	1 1/2	2
K	40	52	70	80
	1.57	2.05	2.76	3.15
L	8.5	8.5	8.5	10
	0.33	0.33	0.33	0.39
M	G1/8" / DN10	G1/4" / DN10	G1/2" / DN10	G1/2" / DN10
	G1/8 / DN10	G1/4 / DN10	G1/2 / DN10	G1/2 / DN10

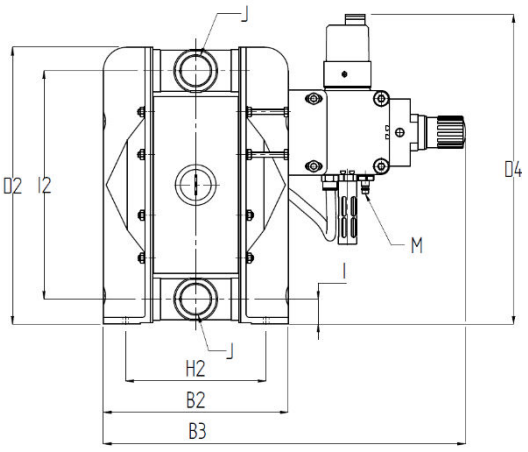

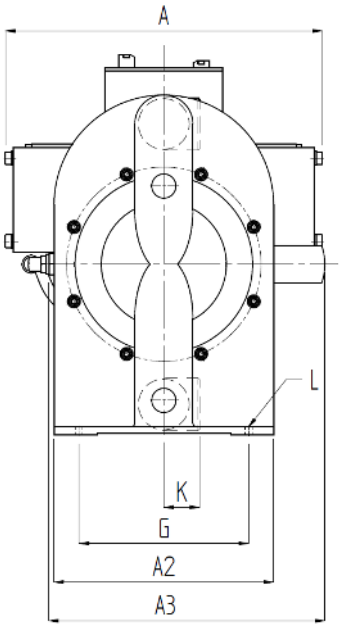

6. DATA

6.4.3. Aluminium / cast iron pumps

DIM	PUMP SIZE			
	70	120	220	420
A	172	319	398	398
	6.77	12.56	15.67	15.67
A2	151	200	275	356
	5.94	7.87	10.83	14.02
B2	167	198	267	342
	6.57	7.80	10.51	13.46
B3	265	405	542	637
	10.43	15.94	21.34	25.08
D2	222	302	418	539
	8.74	11.89	16.46	21.22
D4	167	331	467	559
	6.57	13.03	18.39	22.01
G	116	160	220	280
	4.57	6.30	8.66	11.02
H2	129	158	210	280
	5.08	6.22	8.27	11.02
I	22	27	34	47
	0.87	1.06	1.34	1.85
I2	190	252	346	448
	7.48	9.92	13.62	17.64
J	1/2"	1"	1 1/2"	2"
	1/2	1	1 1/2	2
K	29	33	45	80
	1.14	1.30	1.77	3.15
L	10	10	10	10
	0.39	0.39	0.39	0.39
M	G1/8" / DN10	G1/4" / DN10	G1/2" / DN10	G1/2" / DN10
	G1/8 / DN10	G1/4 / DN10	G1/2 / DN10	G1/2 / DN10

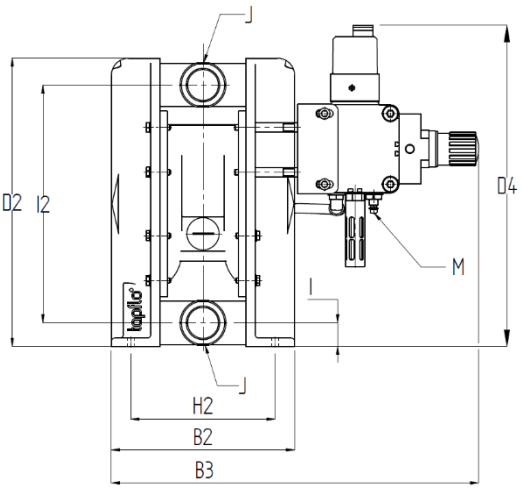

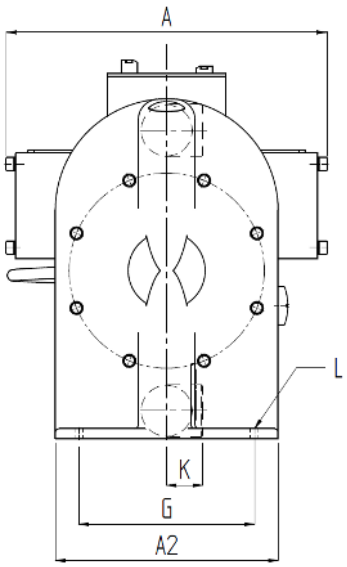

6. DATA

6.5. Tightening torques

Checking of the tightening torques is necessary after all periods of stoppage, when temperature variations are a factor and after all transport and maintenance of the pump. Although pump applications vary, a general guideline is to re-torque the pump every two weeks. What is more for proper operation and safety the torque values should be checked as part of preventive maintenance (please contact Tapflo for interval proposals).

The following tightening torques are recommended.

PUMP SIZE	MOUNTING TORQUE [Nm]
TF50, TF70 S	8
TF100, TF120 S	16
TF200, TF220 S	20
TF400, TF420 S	23
TF70 A/C	12
TF120 A/C	17
TF220 A/C	18
TF420 A/C	20

6.6. Permitted loads on manifolds

We recommend not to exceed the following loads and forces reacting on the manifolds.

TF50		
Direction	**Load [N] (inlet/outlet)**	**Moment of force (inlet/outlet) [Nm]**
X	31	5,3
Y	31	5,3
Z	31	5,3

TF100		
Direction	**Load [N] (inlet/outlet)**	**Moment of force (inlet/outlet) [Nm]**
X	35	6,1
Y	35	6,1
Z	35	6,1

TF200		
Direction	**Load [N] (inlet/outlet)**	**Moment of force (inlet/outlet) [Nm]**
X	43	7,4
Y	43	7,4
Z	43	7,4

TF400		
Direction	**Load [N] (inlet/outlet)**	**Moment of force (inlet/outlet) [Nm]**
X	56	9,6
Y	56	9,6
Z	56	9,6

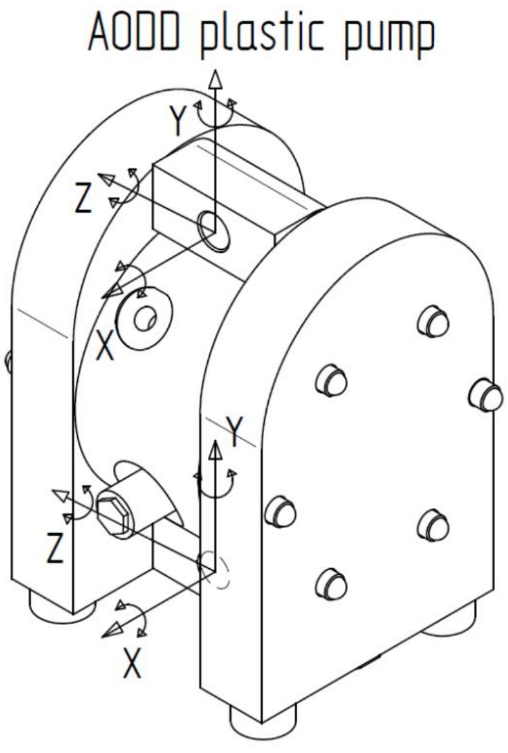

6. DATA

TF70		
Direction	**Load [N] (inlet/outlet)**	**Moment of force (inlet/outlet) [Nm]**
X	31	6,3
Y	31	6,3
Z	31	6,3

TF120		
Direction	**Load [N] (inlet/outlet)**	**Moment of force (inlet/outlet) [Nm]**
X	35	7,3
Y	35	7,3
Z	35	7,3

TF220		
Direction	**Load [N] (inlet/outlet)**	**Moment of force (inlet/outlet) [Nm]**
X	43	8,8
Y	43	8,8
Z	43	8,8

TF420		
Direction	**Load [N] (inlet/outlet)**	**Moment of force (inlet/outlet) [Nm]**
X	56	11,5
Y	56	11,5
Z	56	11,5

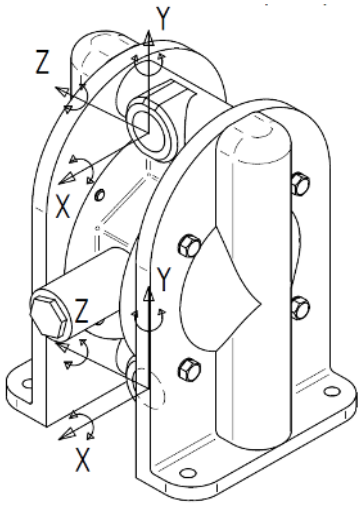

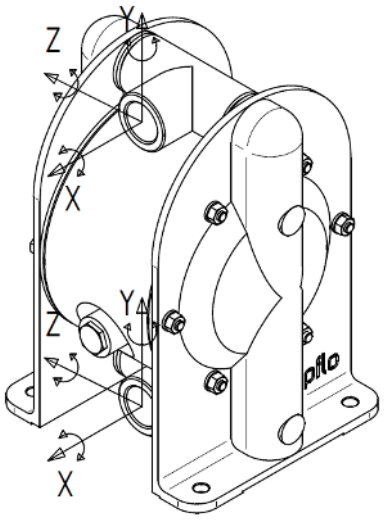

6. WARRANTY

7. WARRANTY

7.1. Warranty form

Company: .....

Telephone: ..... Fax: .....

Address: .....

Country: ..... Contact Name: .....

E-mail: .....

Delivery Date: ..... Date of pump installation: .....

Pump type: .....

Serial No (see name plate or stamped on pump housing): .....

Description of the fault: .....

.....

.....

The installation:

Liquid: .....

Temperature [°C]: ..... Viscosity [cPs]: ..... Spec grav. [kg/m^3]: ..... pH-value: .....

Content of particles: ..... %, of max size [mm]: .....

Flow [l/min]: ..... Duty [h/day]: ..... No of starts per day: .....

Discharge head [mWC]: ..... Suction head / lift [m]: .....

Air pressure [bar]: ..... Quality of the air (filter, micron, lubrication): .....

Other: .....

.....

Place for sketch of installation:

6. WARRANTY

7.2. Returning parts

When returning parts to Tapflo please follow this procedure:

- Consult Tapflo for shipping instructions.
- Cleanse or neutralize and rinse the part/pump. Make sure the part/pump is completely empty from liquid.
- Pack the return articles carefully to prevent any damage during transportation.

Goods will not be accepted unless the above procedure has been complied with.

7.3. Warranty

Tapflo warrants products under conditions as stated below for a period of not more than 5 years from installation and not more than 6 years from date of manufacturing.

1. The following terms and conditions apply to the sale of machinery, components and related services and products, of Tapflo (hereinafter "the products").

2. Tapflo (the manufacturer) warrants that:

    a. its products are free of defects in material, design and workmanship at the time of original purchase;
    b. its products will function in accordance with Tapflo operative manuals; Tapflo does not guarantee that the product will meet the precise needs of the Customer, except for those purposes set out in any invitation to render documents or other documents specifically made available to Tapflo before entering into this agreement;
    c. high quality materials are used in the construction of the pumps and that machining and assembly are carried out to the highest standards.

    Except as expressly stated above, Tapflo makes no warranties, express or implied, concerning the products, including all warranties of fitness for a particular purpose.

3. This warranty shall not be applicable in circumstances other than defects in material, design, and workmanship. In particular warranty shall not cover the following:

    a. Periodic checks, maintenance, repair and replacement of parts due to normal wear and tear (seals, O-rings, rubber items, diaphragms, air valves etc..);
    b. Damage to the product resulting from:
        b.1. Tampering with, abuse or misuse, including but not limited to failure to use the product for its normal purposes as stated at the time of purchase or in accordance with Tapflo instructions for use and maintenance of the product, or the installation or improper ventilation or use of the product in a manner inconsistent with the technical or safety standard in force;
        b.2. Repairs performed by non-skilled personnel or use of non-original Tapflo parts;

b.3. Accidents or any cause beyond the control of Tapflo, including but not limited to lightning, water, fire, earthquake, and public disturbances, etc.;

4. The warrantee shall cover the replacement or repairing of any parts, which is documented faulty due to construction or assembling, with new or repaired parts free of charges delivered by Tapflo. Parts subjected to normal tear and wear shall not be covered by the warranty. Tapflo shall decide as to whether the defective or faulty part shall be replaced or repaired.

5. The warrantee of the products shall be valid for a period in accordance to the current law from the date of delivery, under the condition that notice of the alleged defect to the products or parts thereof be given to Tapflo in written within the mandatory term of 8 days from the discovery. Repair or replacement under the terms of this warranty shall not give a right to an extension to, or a new commencement of, the period of warranty.

6. Repair or replacement under the terms of this warranty shall not give a right to an extension to, or a new commencement of, the period of warranty. Repair or replacement under the terms of this warranty may be fulfilled with functionally equivalent reconditioned units. Tapflo qualified personnel shall be solely entitled to carry out repair or replacement of faulty parts after careful examination of the pump. Replaced faulty parts or components will become the property of Tapflo.

7. The products are built in accordance with standard CE normative and are tested (where applicable) by Tapflo. Approval and tests by other control authority are for the customer's account. The products shall not be considered defective in materials, design or workmanship if they need to be adapted, changed or adjusted to conform to national or local technical or safety standards in force in any country other than that for which the unit was originally designed and manufactured. This warranty shall not reimburse such adaptations, changes or adjustments, or attempt to do so, whether properly performed or not, nor any damage resulting from them, nor any adaptation, change or adjustments to upgrade the products from their normal purpose as described in the products operative manual without the prior written consent of Tapflo.

8. Installation, including electric and other connections to utility mains according to Tapflo drawings, is for the cost and responsibility of the customer, unless otherwise agreed in writing.

9. Tapflo will not be liable on any claim, whether in contact, tort, or otherwise, for any indirect, special, incidental, or consequential damages, caused to the customer or to third parties, including loss of profits, arising by any possible infringement of par. 3 above or by the customer or third parties being in the impossibility of using the products.

Steady the above, Tapflo liability to the customer or third parties from any claim, whether in contract, tort, or otherwise, shall be limited to the total amount paid by the customer for the product that caused the damages.

TAPFLO AB

Sweden

Filaregatan 4 | S-442 34 Kungälv

Tel: +46 303 63390
Fax: +46 303 19916

E-mail addresses:
Commercial questions: sales@tapflo.com
Orders: order@tapflo.com
Tech support: support@tapflo.com

Tapflo products and services are available worldwide.

Tapflo is represented by own Tapflo Group Companies and carefully selected distributors assuring highest Tapflo service quality for our customers' convenience.

AUSTRALIA | AUSTRIA | AZERBAIJAN | BAHRAIN | BELGIUM | BOSNIA | BRAZIL | BULGARIA | CANADA | CHILE | CHINA | COLOMBIA | CROATIA | CZECH REPUBLIC | DENMARK | ECUADOR | EGYPT | ESTONIA | FINLAND | FRANCE | GEORGIA | GERMANY | GREECE | HONG-KONG | HUNGARY | ICELAND | INDIA | INDONESIA | IRELAND | ISRAEL | ITALY | JAPAN | JORDAN | KAZAKHSTAN | KUWAIT | LATVIA | LIBYA | LITHUANIA | MACEDONIA | MALAYSIA | MEXICO | MONTENEGRO | MOROCCO | NETHERLANDS | NEW ZEALAND | NORWAY | OMAN | PHILIPPINES | POLAND | PORTUGAL | QATAR | ROMANIA | SAUDI ARABIA | SERBIA | SINGAPORE | SLOVAKIA | SLOVENIA | SOUTH AFRICA | SOUTH KOREA | SPAIN | SWEDEN | SWITZERLAND | TAIWAN | THAILAND | TURKEY | UKRAINE | UNITED ARAB EMIRATES | UNITED KINGDOM | USA | UZBEKISTAN | VIETNAM

Tapflo Group Companies

Australia
Tapflo Oceania (Pty) Ltd.
Tel: +61 1800303633
sales@tapflo.com.au

Austria
Tapflo GmbH
Tel: +43 73227292910
sales@tapflo.at

Bahrain
Tapflo Gulf General Trading Co. L.L.C
Tel: +971 58 582 3630
sales@tapflogulf.com

Baltic States
Tapflo SIA
Tel: +371 67472205
sales@tapflo.lv

Belgium
Tapflo Benelux B.V.
Tel: +31 (0) 6 21850664
info@tapflo.nl

Bulgaria
Tapflo EOOD
Tel: +359 886 124 937
office@tapflo.bg

Canada
Tapflo Canada
Tel: +1 514 409 8380
office@tapflo.ca

China
Tapflo (Wuxi) Pumps Co. Ltd.
Tel: +86 51082417072
sales@tapflo.cn

Croatia
Tapflo d.o.o.
Tel: +385 914884666
sales@tapflo.hr

Czech Republic
Tapflo s.r.o.
Tel: +420 513033920
tapflo@tapflo.cz

Denmark
Tapflo Danmark ApS
Tel: +45 36454600
info@tapflo.dk

France
Sarl Tapflo France
Tel: +33188788240
info@tapflo.fr

Hungary
Tapflo Kft.
Tel: +36 30148 8551
office@tapflo.hu

India
Tapflo Fluid Handling India Pvt Ltd.
Tel: +91 9028574063
enquiry@tapflo.in

Ireland
Tapflo Ireland Ltd.
Tel: +353 12011911
info@tapflo.ie

Italy
Tapflo Italia S.r.l.
Tel: +39 0362306528
info@tapfloitalia.com

Japan
Tapflo Japan K.K.
Tel: +81 362403510
tapflojp@tapflo.co.jp

Kazakhstan
Tapflo LLP
Tel: +7 727 327 83 47
sales@tapflo.kz

Kuwait
Tapflo Gulf General Trading Co. L.L.C
Tel: +971 58 582 3630
sales@tapflogulf.com

Netherlands
Tapflo Benelux B.V.
Tel: +31 (0) 6 21850664
info@tapflo.nl

Oman
Tapflo Gulf General Trading Co. L.L.C
Tel: +971 58 582 3630
sales@tapflogulf.com

Poland
Tapflo Sp. z o.o.
Tel: +48 609 995 500
info@tapflo.pl

Qatar
Tapflo Gulf General Trading Co. L.L.C
Tel: +971 58 582 3630
sales@tapflogulf.com

Romania
S.C. Tapflo Rom. S.r.l.
Tel: +40 213451255
sales@tapflo.ro

Saudi Arabia
Tapflo Gulf General Trading Co. L.L.C
Tel: +971 58 582 3630
sales@tapflogulf.com

Serbia
Tapflo d.o.o.
Tel: +381 21445808
sales@tapflo.rs

Slovakia
Tapflo s.r.o.
Tel: +421 911137883
tapflo@tapflo.sk

Slovenia
Tapflo d.o.o.
Tel: +386 68613474
sales@tapflo.hr

Spain
Tapflo Ibérica S.L.
Tel: +34 918093182
avives@tapfloiberica.es

South Africa
Tapflo (Pty) Ltd.
Tel: +27 317015255
sales@tapflo.co.za

Sweden
Tapflo ABTel: +46
(0)30314050info@tapflo.com

Turkey
Tapflo Makina Ltd.
Tel: +90 2164673311
sales@tapflo.com.tr

Ukraine
Tapflo LLC
Tel: +380 442226844
sales@tapflo.ua

United Arab Emirates
Tapflo Gulf General Trading Co. L.L.C
Tel: +971 58 582 3630
sales@tapflogulf.com

United Kingdom
Tapflo (UK) Ltd.
Tel: +44 2380252325
sales@tapflopumps.co.uk

Uzbekistan
Tapflo Uzbekistan
Tel: +998 712370940
sales@tapflo.uz

If your country is not listed please visit www.tapflo.com/en/contact

www.tapflo.com

Tapflo is a registered trademark of Tapflo AB. All rights reserved.

Information in this document is subject to change without notice. Reproduction in any manner without written permission of Tapflo Group is forbidden. Tapflo Group reserves the right to make changes in product design, or detail, and to discontinue any product or material without notice.