IOM manual

tapflo®

Pharmaceutical Diaphragm Pumps

edition 2019 rev 2
Original instruction

STOP Read this instruction manual carefully, before you install and operate the pump.

CE

Pump models:

T53

T103

T203

T403



All about your flow

www.tapflo.com

CONTENTS

0. GENERAL 5
0.1. Introduction 5
0.2. Warning symbols 5
0.3. Qualification and training of personnel 5
1. INSTALLATION 6
1.1. Operation principle 6
1.2. Receiving inspection 6
1.3. Lifting and transportation 7
1.4. Storage 7
1.5. Foundation 7
1.6. Suction and discharge piping 7
1.6.1. Rotary connections 8
1.6.2. Connection of suction pipe 8
1.6.3. Connection of discharge pipe 8
1.7. Health and safety 8
1.7.1. Protection 8
1.7.2. Environments in danger of explosion 8
1.7.3. Air pressure 9
1.7.4. Noise level 9
1.7.5. Temperature hazards 9
1.7.6. Mixing danger 9
1.8. Air connection 10
1.8.1. Air treatment system 10
1.9. Example of installation 10
1.10. Recommended installations 11
1.10.1. Flooded 11
1.10.2. Self-priming 11
1.10.3. Submerged 11
2. OPERATION 12
2.1. Before starting the pump 12
2.2. Starting and operation 12
2.2.1. Dry running 12
2.2.2. Optimization of the pump lifetime 12
2.3. Pump stopping 13
2.4. Residual risks 13

CONTENTS

2.5. Disposal after expiration of the expected lifetime 13
2.6. Actions in emergency 13
3. MAINTENANCE 14
3.1. When the pump is new or reassembled 14
3.1.1. Performance test 14
3.2. Routine inspection 14
3.3. Complete inspection 14
3.4. Location of faults 15
3.5. T53-T403 – Disassembly of the pump 16
3.5.1. Before the disassembly procedure 16
3.5.2. Disassembly procedure 16
3.6. T53-T403 – Assembly of the pump 19
3.6.1. Test run 19
4. SPARE PARTS 20
4.1. T53 – T103 – Spare parts drawing 20
4.2. T53 – T103 – Spare parts list 21
4.3. T53-T103 – Spare parts – Options 22
4.4. T203 – T403 – Spare parts drawing 23
4.5. T203 – T403 – Spare parts list 24
4.6. T203-T403 – Spare parts – Options 24
4.7. Stocking recommendation 25
4.8. How to order parts 26
4.9. Pump code 26
5. DATA 27
5.1. Capacity curves 27
5.2. Capacity changes 27
5.3. Technical data 28
5.4. Dimensions 29
5.5. Tightening torques 30
5.6. Permitted loads on manifolds 30
6. WARRANTY 31
6.1. Warranty form 31
6.2. Returning parts 32
6.3. Warranty 32

EC DECLARATION OF CONFORMITY 01/EC/PHA/2017

Series:
T(…)53…; T(…)103…; T(…)203…; T(…)403…;

Serial numbers:
2013 - … (from 1301-…)

Manufactured by:
Tapflo AB
Filaregatan 4
4434 Kungälv, Sweeden

This declaration of conformity is issued under the sole responsibility of the manufacturer.

Object of declaration: **AIR OPERATED DIAPHRAGM PUMPS**

The object of the declaration described above is in conformity with the relevant Union harmonization legislation:

- Directive 2006/42/EC of European Parliament and of the Council of 17 May 2006 on machinery, amending Directive 95/16/EC;

Mr Michał Śmigiel is authorized to compile the technical file.
Tapflo Sp. z o.o.
ul. Czatkowska 4b
83-110 Tczew

Signed for and on behalf of Tapflo AB

Håkan Ekstrand
Managing director

Tapflo AB, 02.03.2017r

0. GENERAL

0.1. Introduction

The Tapflo Air Operated Diaphragm Pump range is a complete series of pumps for industrial applications. The pumps are designed to be safe, simple and easy to use and maintain. The construction is seal-less and without rotating parts. The pumps are suitable for almost all different chemicals used by the industry today.

We are proud to introduce our USP VI approved (United States Pharmacopoeia) hygienic PP and PTFE pump. This series is developed in co-operation with one of the world leading supplier to the biotech market. It is produced to serve the biotech- and pharmaceutical industries in numerous applications

With proper attention to maintenance, Tapflo Pumps will give efficient and trouble free operation. This instruction manual will familiarise operators with detailed information about installing, operating and maintaining of the pump.

0.2. Warning symbols

The following warning symbols are present in this instruction manual. This is what they say:



This symbol stands next to all safety instructions in this instruction manual where danger to life and limb may occur. Observe these instructions and proceed with utmost caution in these situations. Inform also other users of all safety instructions. In addition to the instructions in this instruction manual, the general safety and accident prevention regulations must be observed.



This signal stands at points in this instruction manual of particular importance for compliance with regulations and directives, for correct work flow and for the prevention of damage to and destruction of the complete pump or its subassemblies.

0.3. Qualification and training of personnel



The personnel in charge of installation, operation and maintenance of the pumps we produce must be qualified to carry out the operations described in this manual. Tapflo shall not be held responsible for the training level of personnel and for the fact that they are not fully aware of the contents of this manual. In case any instructions in this manual are unclear or any information is lacking, please contact Tapflo before handling the pump.

1. INSTALLATION

1. INSTALLATION

1.1. Operation principle

The Tapflo diaphragm pump is driven by compressed air. The two diaphragms are connected by a diaphragm shaft and pushed back and forth by alternately pressurising the air chambers behind the diaphragms using an automatically cycling air valve system.

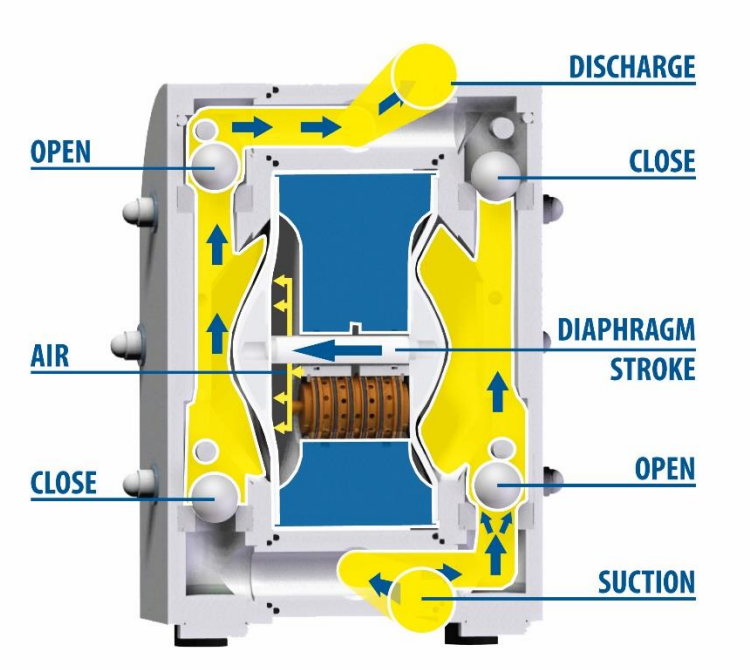

The Suction Cycle:

- **Suction**
  One diaphragm creates a suction action in one chamber (on the right) when being pulled back from the housing.
- **Discharge**
  The other diaphragm simultaneously transmits the air pressure to the liquid in the second chamber (on the left) of the housing, pushing it towards the discharge port.

During each cycle the air pressure on the back of the discharging diaphragm is equal to the head pressure on the liquid side. Tapflo diaphragm pumps can therefore be operated against a closed discharge valve with no negative effect to the life of the diaphragms.

1.2. Receiving inspection

Although precaution is taken by us when packing and shipping, we urge you to carefully check the shipment on receipt. Make sure that all parts and accessories listed on the packing list are accounted for. Immediately report any damage or shortage to the transport company and to us.

1. INSTALLATION

1.3. Lifting and transportation

Before handling the pump check the weight of the pump (see 5.3. *Technical data*). Refer to Your local standards on how to handle the pump. If the weight is excessive to transport by hand it must be lifted using slings and a suitable lifting device e.g. a crane or forklift.
Always use at least two slings and make sure they are secured in such a way to prevent the pump from slipping and that the pump unit is hanging straight.
Never lift the pump with only one sling. Incorrect lifting can cause serious injury and/or damage to the pump.

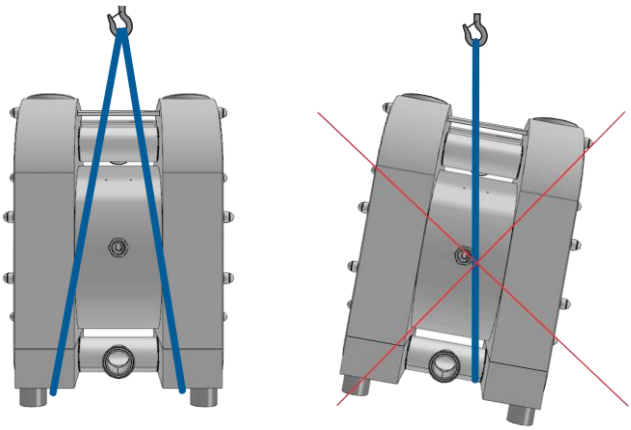

Never lift the pump under pressure.
Be careful that nobody passes under the pump when lifted.
Never try to lift the pump by the manifolds or hoses attached to the pump.
As an option pumps can be equipped with lifting eyebolts connected with the pump pin screws.

1.4. Storage

If the equipment is to be stored prior to installation, place it in a clean location. The pump should be stored in an ambient temperature of 15°C (59°F) to 25°C (77°F) and relative humidity below 65%. It should not be exposed to any heat source e.g. radiator, sun as this could result in a negative way on the tightness of the pump. Do not remove the protective covers from the suction, discharge and air connections which have been fastened to keep pump internals free of debris. Clean the pump thoroughly before installation.

1.5. Foundation

The pump is equipped with vibration absorbing rubber feet. The pump will operate properly without being fixed to a foundation. If fixation is needed for installation purposes, make sure the foundation is able to absorb vibrations. It is essential for the operation of the pump to mount the pump with the feet in a downward direction (see sketch in chapter 1.8 "Example of installation").

1.6. Suction and discharge piping

Suction and discharge piping should be fully supported and anchored near to but independent of the pump. The piping connected to the pump should be a hose, to prevent undue stress and strain on the pump connections and the piping.

1. INSTALLATION

1.6.1. Rotary connections

The suction and discharge connections can be rotated 180°. This simplifies the assembly and installation of the pump. If you wish to rotate the connections, the housing nuts must be slightly released, then screw a threaded nipple into the connection and rotate it.

1.6.2. Connection of suction pipe

Remember that the suction pipe/connection is the most critical point, especially if the pump is priming. Just a small leakage will dramatically reduce the suction capability of the pump. When connecting the suction pipe, the following is recommended:

1) For satisfactory operation, use a reinforced hose (the suction power may otherwise shrink the hose) or other flexible piping. The internal diameter of the hose should be the same as on the suction connection (at the bottom of the pump) to have best suction capability.
2) Make sure that the connection between the hose and the pump is completely tight, otherwise the suction capability will be reduced.
3) Always use as short suction pipe as possible. Avoid air pockets which can emerge with long piping.
4) If the diameter of a hose is smaller, it will affect the pump performance or cause it's malfunction.

1.6.3. Connection of discharge pipe

For this connection it is only recommended to have a simple and positive flow connection. Use a hose or flexible piping (minimum one meter) between the discharge connection and any rigid fixed piping. Coil the hose at least one turn. All components (hose, pipe, valves etc.) on the discharge piping must be designed for minimum PN 10.

1.7. Health and safety

The pump must be installed according to local and national safety rules.



The pumps are constructed for particular applications. Do not use the pump on applications different from that for which it was sold without consulting us to ascertain its suitability.

1.7.1. Protection



In the interest of health and safety it is essential to wear protective clothing and safety goggles when operating, and/or working in the vicinity of Tapflo pumps.

1.7.2. Environments in danger of explosion



The standard Pharmaceutical series pumps are not allowed to operate in environments in danger of explosion. Static electricity may occur in the pump under operation, which may cause explosion and injury. Follow the explosion safety rules applicable at the location for the pump. Please contact us for further information.

1. INSTALLATION

1.7.3. Air pressure

The maximum air pressure for Tapflo pumps is 8 bar. Higher air pressure than 8 bar can damage the pump and may cause injury to personnel in vicinity of the pump. If you intend to apply a higher air pressure than 8 bar, please consult us.

1.7.4. Noise level



At tests, the noise level from a Tapflo pump has not exceeded 85 dB(A). Under some circumstances, for example if the pump is operating under high air pressure at low discharge head, the noise can be inconvenient or hazardous for personnel staying for long periods in the vicinity of the pump. This hazard can be prevented by:

- using suitable ear protection;
- lowering the air pressure and/or raising the discharge head;
- leading out the outgoing air from the room by connecting a hose to the muffler connection of the pump;
- using elastomer valve balls (EPDM, NBR or polyurethane) instead of PTFE, ceramic or stainless steel, provided that the elastomer is compatible with the pumped liquid.

1.7.5. Temperature hazards

- Raised temperature can cause damage on the pump and/or piping and may also be hazardous for personnel in the vicinity of the pump/piping. Avoid quick temperature changes and do not exceed the maximum temperature specified when the pump was ordered. See also general max temperatures based on water in chapter *5 "DATA"*.



- When the pump is exposed to ambient temperature variations or if there is big difference between the temperature of the product and the surrounding, the tightening torques of the housing nuts should be checked periodically as part of preventive maintenance.

- If a hot product is pumped, the pump should not stand still when filled for a longer period of time. This could cause leakage from the valves and contamination and/or damage of the air valve.



- Below 0°C (32°F) plastic materials become more fragile what can cause accelerated wear of parts made of these materials. This is a hazard that has to be accepted when pumping such cold products. Also in such case, when a pump is not operational it should be drained of all liquid.

- Bear in mind that the viscosity of the product changes with temperature. This has to be taken into consideration when selecting the pump.

- The fluid remaining in the connected piping, as well as in the pump itself, may expand because of freezing or heat, which may cause damage to the pump or/and piping, and lead to leakage of the fluid.

1.7.6. Mixing danger

The pumps are tested with water. If the pumped product can come into reaction with water, please make sure the pump is dry before putting it into operation.

1. INSTALLATION

1.8. Air connection

Screw the air hose into the air intake on the centre block of the pump with for example a quick release coupling. For best efficiency, use the same hose diameter as the internal diameter of the connection on the air intake.

1.8.1. Air treatment system

The air valve is constructed for oil-free air. Lubrication of the air is ***not allowed.*** However, if the air is ***very dry*** (laboratory air), we recommend to use a plastic air valve. Maximum air pressure is 8 bar. As prevention purpose, a filtration of the air by means of a 5 micron filter or finer is recommended. Recommended air quality according to PN-ISO8573-1:2010 is particles class 6, water class 4 and oil class 4. Dirt in the air can under unfortunate circumstances be the cause of a breakdown. If a compressor used to generate compressed air is not fitted with an air dryer it is recommended to use a water separator to remove the extent of water from the prepared air.

To facilitate the operation of the pump we recommend an air treatment system connected to the air supply. These components should be included:

1) Regulator to adjust the air pressure;
2) Manometer to read the actual pressure;
3) Needle valve to adjust the air flow (especially when operating the pump in the lower range of performance);
4) Filter.

These components are included in Tapflo's **Air treatment system** which can be ordered from us.

1.9. Example of installation

1) Gate valve compressed air
2) Filter and pressure regulator
3) Flexible hose
4) Needle valve
5) Flexible piping
6) Gate valve suction
7) Gate valve discharge
8) Coiled flexible piping
9) Flow gauge

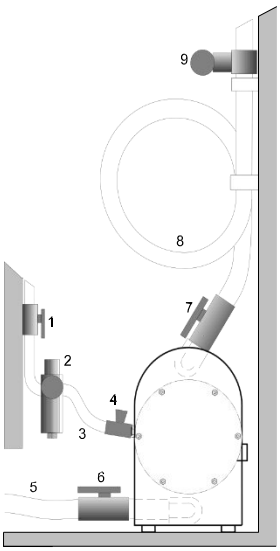

1. INSTALLATION

1.10. Recommended installations

The Tapflo pump is flexible in the way you are able to install it. The in- and outlet ports can be rotated more than 180° to fit various piping systems.

1.10.1. Flooded

The piping system is designed with a positive suction head. This is the best way of installation where it is necessary to completely empty all liquid from the container, or where viscous (thick) products are transferred.

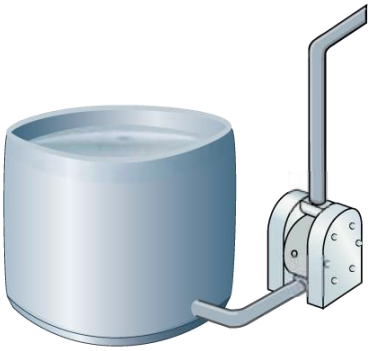

NOTE! **Do not exceed 0,7 bar suction pressure! Higher pressure may cause premature diaphragm failure and irregular pump operation.**

1.10.2. Self-priming

The Tapflo pump is designed to pull a high vacuum. It is able to evacuate an empty suction pipe without any damage to the pump. The suction lift is up to 5 meters (16.4 ft.) from an empty suction pipe and up to 8 meters (26.2 ft.) from a wetted pipe. The suction capability depends on the pump size (see chapter 5 "DATA").

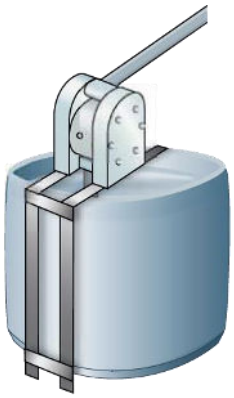

1.10.3. Submerged

All Tapflo pumps may be submerged into the liquid. It is important to make sure that all components which are in contact with the liquid are chemically compatible. The air exhaust must be led to the atmosphere by means of a hose.



NOTE!

Even if all above safety instructions are met and complied with, there still exists a minor danger in the event of a leakage or mechanical damage of the pump. In such case the pumped product can emerge on sealing areas and connections.

2. OPERATION

2.1. Before starting the pump

- Make sure the pump is installed according to the installation instruction (chapter 1).



- Filling of the pump with liquid before start is not necessary.
- When installation is new or reinstalled, a test run of the pump with water should be conducted to make sure that the pump operates normally and does not leak.



- When installation is new or reinstalled, check the pump housing nuts tightening torque (see chapter 5.5 – *„Tightening torques"*). After approximately two weeks of operation, the torque should be checked again. This is important to prevent possible leakage.

2.2. Starting and operation

- Open the discharge valve.
- ***Note! Considering the suction capacity when air is still in the suction pipe, it is recommended to start with low air pressure/flow (slowly) at the beginning. This is not necessary if the pump is filled with liquid before start.***
- When the pump has been filled with liquid, the air pressure/flow may be raised in order to increase the suction capacity of the pump.
- The performance of the pump can be adjusted through the air supply by using a needle valve and a pressure regulator. The performance can also be adjusted by normal flow control on the discharge side of the system.

2.2.1. Dry running

Although the pump is prepared for dry running it is important to have in mind that long periods of dry run may cause damage to the air valve and circlips. Also an empty pump should operate at low speeds – controlled by a needle-valve.

2.2.2. Optimization of the pump lifetime

- Running at full frequency (maximum air pressure/flow) continuously will cause premature wear of the components. When there is possibility of the pump running dry or/and at full frequency it is recommended to use an air valve with a PET piston. As a general rule, we recommend to run at half of the maximum capacity of the pump. For instance, a T103 pump should run continuously at maximum ~50 l/min.
- As stated in chapter *1.8.1 „Air treatment system"* Tapflo recommends to use an appropriate air treatment system in order to extend the pump's lifetime.



- If the air humidity is high, use of a water separator or air dryer is recommended. Otherwise on the air discharge side due to decompression, icing on the muffler can appear causing it to shrink and eventually it can shoot out of its socket.

- If the ambient air is humid, icing can occur outside of the muffler. In such case it is recommended to use a longer exhaust of the compressed air (ca. 500 mm / 19,7'').
- If there is possibility of freezing at the air exhaust, it is good to pre-heat the air before it reaches the air intake in order to raise the dew point of the air.
  NOTE! Make sure that the air temperature does not exceed 50°C (122°F).
- If icing / freezing is still a problem with the standard muffler, we recommend using our heavy duty metal muffler. Contact us for more information.
- When the pump is shut down while pumping a liquid containing particles, the particulate matter contained in the liquid will be deposited and get stuck inside the pump chamber. Therefore after finishing work the pump must be emptied of the remaining fluid. Otherwise, when starting the pump again, the diaphragm may get damaged and the shaft may bend leading to grub screw fracture.

2.3. Pump stopping

The pump can be stopped in two ways:

1) By closing of the discharge valve. The pressure from the system will stop the pump automatically. The pump restarts easily when the valve is opened again. ***NOTE!*** When using this method keep in mind that air must be supplied to the pump. This is essential to keep the diaphragms in balance what protects them from premature failure.
2) By cutting off the air supply.
   NOTE! When using this method make sure that the discharge valve is opened to relief the pumps pressure.

2.4. Residual risks

Even with proper application and observance of all points listed in this operating manual, there is still an estimable and unexpected residual risk when using the pumps. It may leak, fail due to wear, application-related causes or system-related circumstances.

2.5. Disposal after expiration of the expected lifetime

The metallic components like aluminium, stainless steel and carbon steel can be recycled. Plastic parts are not recyclable and must be disposed of as residual waste. The pump must be disposed of properly, according to local regulations. It should be noted that potentially dangerous fluid residues may remain in the pump and can create a hazard to the operator or the environment, therefore the pump has to thoroughly cleaned before disposal.

2.6. Actions in emergency

In case of a leakage of an unknown fluid, respiratory protection should be worn and contact with the fluid avoided. During firefighting, no special hazards are to be expected from the pump itself. In addition, the currently handled fluid and the corresponding safety data sheet must be taken into account. When fluid leakage occurs, the air supply has to be closed and the pressure released. During spillage of an aggressive liquid, local and national safety rules must be followed.

3. MAINTENANCE

3. MAINTENANCE

3.1. When the pump is new or reassembled



If the pump is new or reassembled after maintenance it is important to retighten the pump housing nuts (pos. 37) after a two weeks of operation.
Make sure to use the right torque – see chapter 5.5 *„Tightening torques"*.

3.1.1. Performance test

When installation is new, a test run of the pump should be conducted. Gauge the capacity at specific air pressure/flow. This information is useful for checking performance in the future as wear takes place. You will be able to set schedules for maintenance of the pump and to select spare parts to be kept on stock.

3.2. Routine inspection



Frequent observation of the pump operation is recommended to detect problems. A change in sound of the running pump can be an indication of wearing parts (see chapter *3.4 "Location of faults"* below).
Leaking liquid from the pump and changes of performance may also be detected. Routine inspections should be conducted frequently.
We recommend to conduct a daily check and keep records of the following:

- Leakage of fluid from any connection of the pump
- Tightness of all connection parts of the pump and any peripheral equipment
- Complete inspection in regular intervals has been done

In case any of the above is not fulfilled, do not start the pump and implement corrective actions.
Establish a preventive maintenance schedule based on the pump's service history. Scheduled maintenance is especially important to prevent spills or leakage due to diaphragm failure.

3.3. Complete inspection



The intervals for a complete inspection depend upon the operation conditions of the pump. The characteristics of the liquid, temperature, materials used in the pump and running time decide how often a complete inspection is necessary.
Nevertheless, Tapflo recommend to inspect the pump at least once a year.
If a problem has occurred, or if the pump is in need of a complete inspection, refer to chapters *3.4 "Location of faults"* and *3.5 "Dismantling of the pump"*. You are of course warmly welcome to consult us for further help.
Parts that are subject to wear should be kept in stock, see our recommendations in chapter *4.7 "Stocking recommendation"*.

3. MAINTENANCE

3.4. Location of faults

PROBLEM	POSSIBLE FAULT	POSSIBLE SOLUTION
The pump does not run	The air pressure is to low The air connection is blocked Muffler is blocked Air valve is defective Dirt in the pump chamber Diaphragm breakdown	Increase air pressure via a filter-regulator Check / clean air supply connection Check / clean / replace muffler Clean / replace complete air valve Remove debris from the chambers Replace diaphragm
The suction is bad	Suction connection is not tight Suction connection is blocked Muffler is blocked Valve balls are blocked or damaged Valve seats are worn Pump starts with high pressure Air in suction / discharge line Dry suction against discharge pressure	Tighten the suction line Clean suction line Check / clean / replace muffler Check dimensions and shape of valve balls Check dimensions and shape of valve seats Start the pump slowly (see chapter 2.2) Vent suction / discharge line Wet the pump / start without discharge pressure
The pump runs irregular	Valve balls are blocked Sealing in centre block Air valve is defective Diaphragm breakdown Valve seats are worn Icing on the muffler	Check dimensions and shape of valve balls Replace sealing Clean / replace air valve Replace diaphragm Check dimensions and shape of valve seats Improve air quality (see chapters 1.7.1 and 2.2.2)
Bad flow/pressure	Pressure fall in air supply Pressure losses on suction side Air supply / air valve leaking Suction or air connection blocked Muffler is blocked Valve ball worn or broken Valve seats are worn Air in liquid Diaphragm breakdown Icing on the muffler	Increase air pressure via a filter-regulator Check/change installation on suction side Check / repair / replace air supply / air valve Check / clean air supply / suction connection Check / clean / replace muffler Check dimensions and shape of valve balls Check dimensions and shape of valve seats Seal suction line; check / refill container Check / replace diaphragms Improve air quality (see chapters 1.7.1 and 2.2.2)
Liquid leaks from the pump	Screws on the housing not properly tightened O-rings on manifolds damaged Damaged diaphragm Tension / stress form the installation	Check tightening torques of the screws Replace O-rings Check / replace diaphragms Adjust installation, eliminate stress, when using a dampener provide separate support for it (see dampener IOM manual).
Liquid comes out of the muffler	Diaphragm breakdown	Replace diaphragm
Diaphragm breakdown	Wrong selection of material Too high pressure in the installation Long periods of dry running Too high pressure on suction side	Contact us for material selection information Use air treatment system for protection When dry, run pump slowly (see chapter 2.2) Make sure there is pressure balance between the air and liquid side of the diaphragm

3. MAINTENANCE

3.5. T53-T403 – Disassembly of the pump

The numbers put in brackets, refer to the part numbers in the spare part drawings and spare part lists in chapter 4 *"SPARE PARTS"*.

3.5.1. Before the disassembly procedure



Be sure to drain all liquid from the pump. Cleanse or neutralize the pump thoroughly. Disconnect the air supply and then the suction and discharge connections.

3.5.2. Disassembly procedure



Fig. 3.5.1
Pull of the nut covers [57] and unscrew the nuts [37] on one side of the pump.



Fig. 3.5.2
Carefully put the pump housing which still has the nuts on. Lift of the housing assembly [11+112].



Fig. 3.5.3
Carefully lift up the loose in/outlet connections [13] from the housing. Take care of the O-rings [181+184].

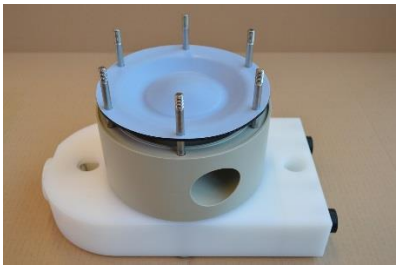

Fig. 3.5.4
Now, you have the center block assembly and one of the housing assembly with pin screws left. Lift up the center block assembly. Be careful with diaphragms [15] while lifting, they can be easily damaged by the threads of the pin screws.



Fig. 3.5.5
Unscrew the plug [33] by means of a screw tool. Turn the housing upside down and let the valve ball [23] come out. Repeat the same procedure on the other housing assembly.

3. MAINTENANCE



Fig. 3.5.6
Take care of the O-ring [431].

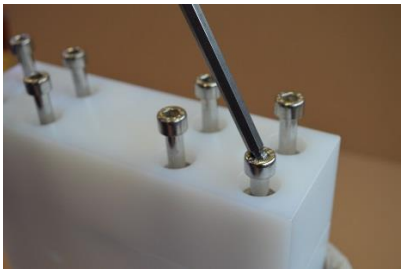

Fig. 3.7.7
Unscrew the socket head cap screw [371].
Repeat the same procedure to the other housing assembly.

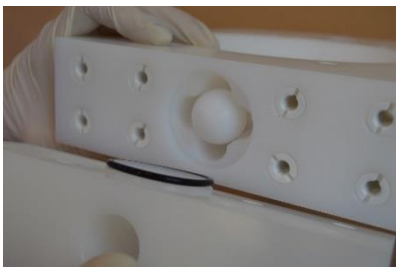

Fig. 3.7.8
Separate the upper [11] and lower housing [112]. Take care of the O-ring [432]. Repeat the same procedure to the other housing assembly.



Fig. 3.7.9
Unscrew the diaphragm [15] from one side of the pump.

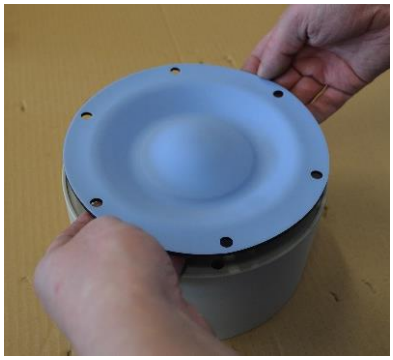

Fig. 3.7.10
Take out the second diaphragm [15] along with the shaft [16].

3. MAINTENANCE

a) Circlip mounted air valve – T53 and T103



Fig. 3.5.11
Using pliers remove both circlips [27] from the centre block [12].
Attention! While doing this, cover yourself with your other hand, as the circlip easily flips away



Fig. 3.5.12
Press out the air valve [61] by means of a pressing device. Be careful not to damage the brass edges of the air valve.

b) Plate mounted air valve – T203 and T403 from s/n 1106

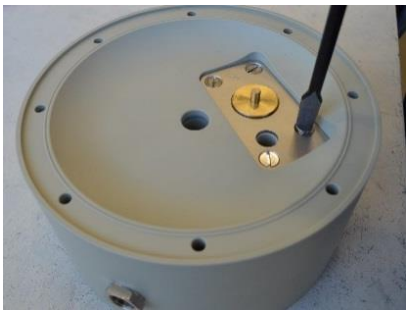

Fig. 3.5.13
Unscrew plate screws [2711] from both sides of the centre body [122] and take out the left and right plate [271].



Fig. 3.5.14
Press out the air valve [61] by means of a pressing device. Be careful not to damage the brass edges of the air valve.

The pump is now completely disassembled. Check all components for wear or damage and replace if necessary.
When air valve is removed from the centre body check the external O-rings (6 x pos. 30) condition and replace if necessary.

3. MAINTENANCE

3.6. T53-T403 – Assembly of the pump

The assembly procedure is done in the reverse order to the disassembly.
Nevertheless there are a few things that you have to remember in order to assemble the pump correctly.

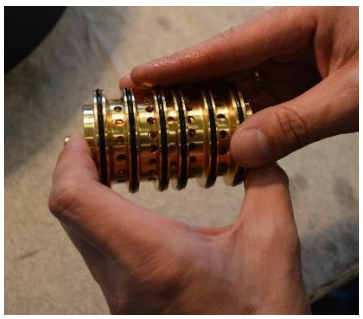

Fig. 3.6.1
When putting the air valve [61] into the centre block [12], apply some water or alcohol on the O-rings to provide smooth insertion of the air valve.
It is recommended to use a pressing device for this operation.



Fig. 3.6.2
When there is need to replace the diaphragm pin screw [1652], while screwing it into the diaphragm [15] make sure the pin screw goes all the way.



Fig. 3.6.3
When screwing in the diaphragms [15] on the shaft [16], the holes in the diaphragms must align with the holes in the centre block [12]. Sometimes it is necessary to turn the diaphragm back a little bit in order to align the holes.

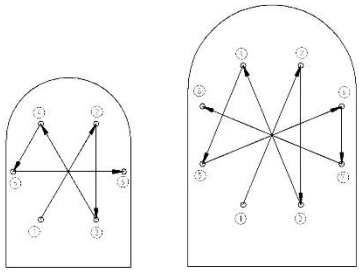

Fig. 3.6.4
When fastening the domed nuts, remember to do it according to the tightening procedure and with the appropriate torque.
NOTE! After two weeks of operation retighten the domed nuts with the appropriate torque.

3.6.1. Test run

We recommend you to conduct a test run of the pump before installing it in the system, so no liquid gets wasted if the pump leaks or perhaps does not start accordingly to wrong assembly of the pump.
After two weeks of operation retighten the nuts with appropriate torque.

4. SPARE PARTS

4.1. T53 – T103 – Spare parts drawing

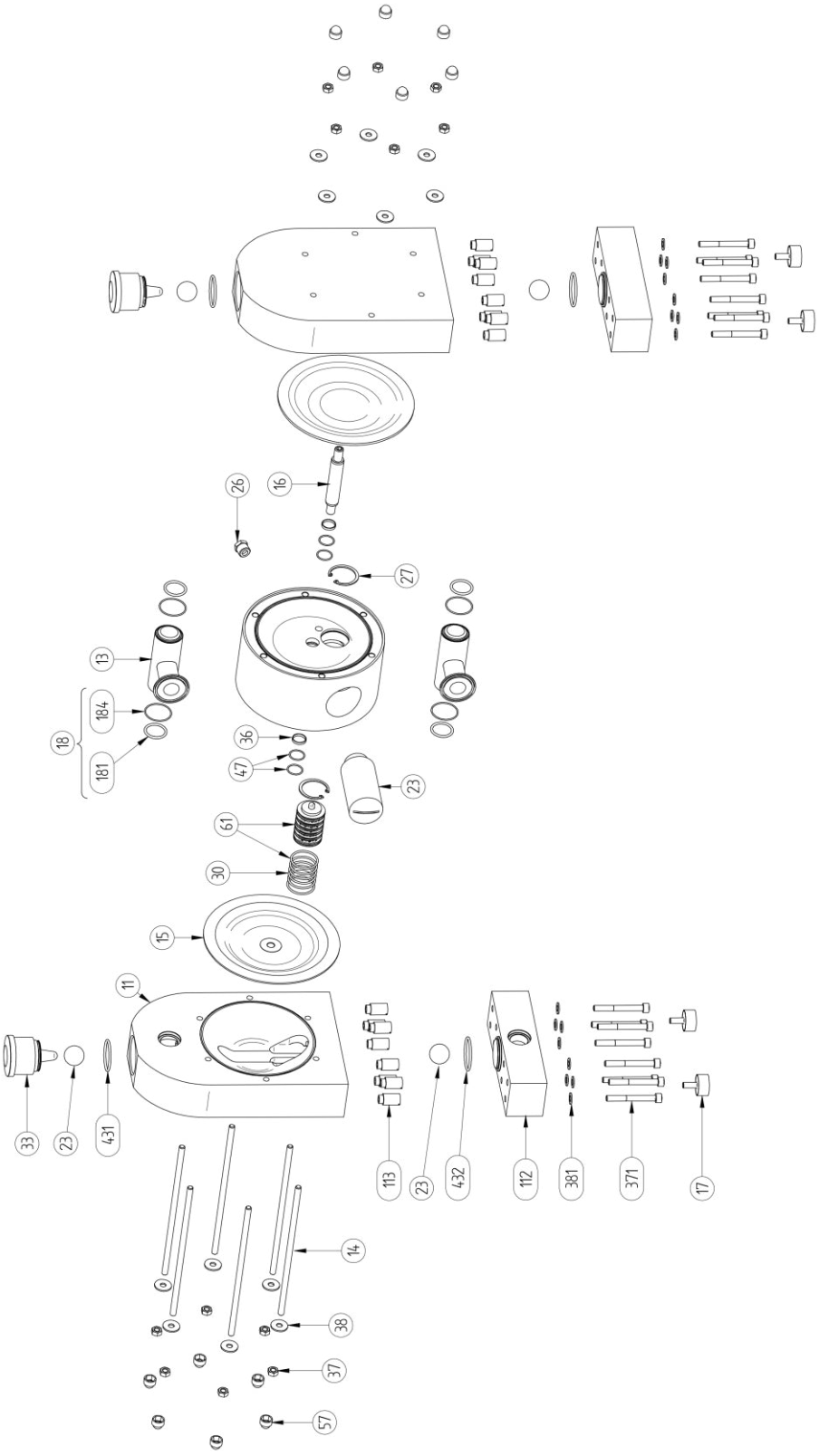

4. SPARE PARTS

4.2. T53 – T103 – Spare parts list

Pos.	Q-ty		Description	Material
	T53	T103		
11	2	2	Upper housing	PP (USP VI approved), PTFE (USP VI approved), PE
112	2	2	Lower housing	PP (USP VI approved), PTFE (USP VI approved), PE
113	16	16	Connecting plugs	PET
12	1	1	Centre block	PP
13	2	2	In/Outlet	AISI 316L
14	6	6	Pin screw	A4-80
15	2	2	Diaphragm	PTFE / EPDM back (USP VI approved)*
16	1	1	Diaphragm shaft	AISI 304L
17	4	4	Rubber foot	NBR
181	4	4	O-ring (in/outlet)	EPDM (USP VI approved), FEP/FKM (USP VI approved)
184	4	4	O-ring (in/outlet)	EPDM (USP VI approved), FEP/FKM (USP VI approved)
23	4	4	Valve ball	PTFE (USP VI approved)*
25	1	1	Muffler	PP
26	1	1	Air intake adapter	Galvanized brass
27	2	2	Circlip	Cr3 coated steel
30	6	6	O-ring	NBR
33	2	2	Plug	PP (USP VI approved), PTFE (USP VI approved), PE
36	2	2	Centerblock seal	PE
37	12	12	Nut	A4-70
371	16	16	Socket head cap screw	A4-70
38	12	12	Washer	A4-70
381	16	16	Washer	A4-70
431	2	2	O-ring (plug)	EPDM (USP VI approved), FEP/FKM (USP VI approved)
432	2	2	O-ring (lower housing)	EPDM (USP VI approved), FEP/FKM (USP VI approved)
47	2	4	O-ring (back up for 36)	NBR
57	12	12	Nut cover	PE
61	1	1	Air valve complete	Body: brass (standard), AISI 316L or PET, O-rings: NBR (standard), EPDM or FKM

**Ingredients used for manufacturing of diaphragm liquid contact side and valve balls are USP VI approved*

4. SPARE PARTS

4.3. T53-T103 – Spare parts – Options

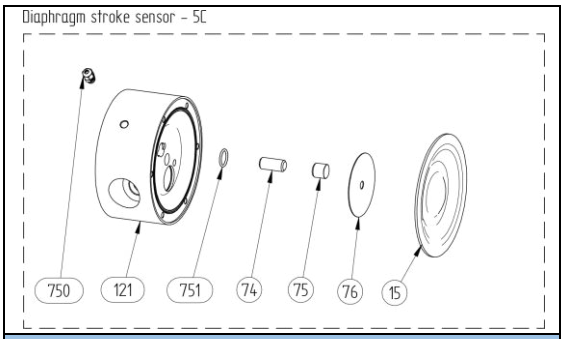

Diaphragm stroke sensor			
121	1	Centerblock for stroke sensor	PP
43	1	O-ring	NBR, FKM, EPDM
74	1	Inductive sensor	CuZn
75	1	Sensor cap	PP
76	1	Sensing plate	AISI 316L
750	1	Cable gland	PP

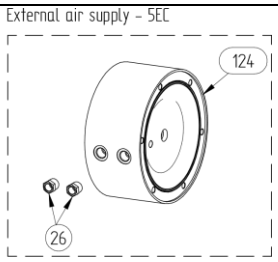

External air supply			
124	1	Centerblock	PP
26	2	Air intake adapter	Brass

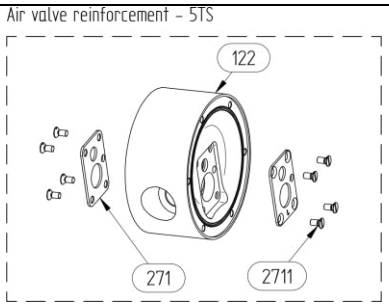

Plate mounted air valve			
122	1	Centerblock	PP
271	1	Set of 2 plates	AISI 316L
2711	8	Screws	A4-70

4. SPARE PARTS

4.4. T203 – T403 – Spare parts drawing

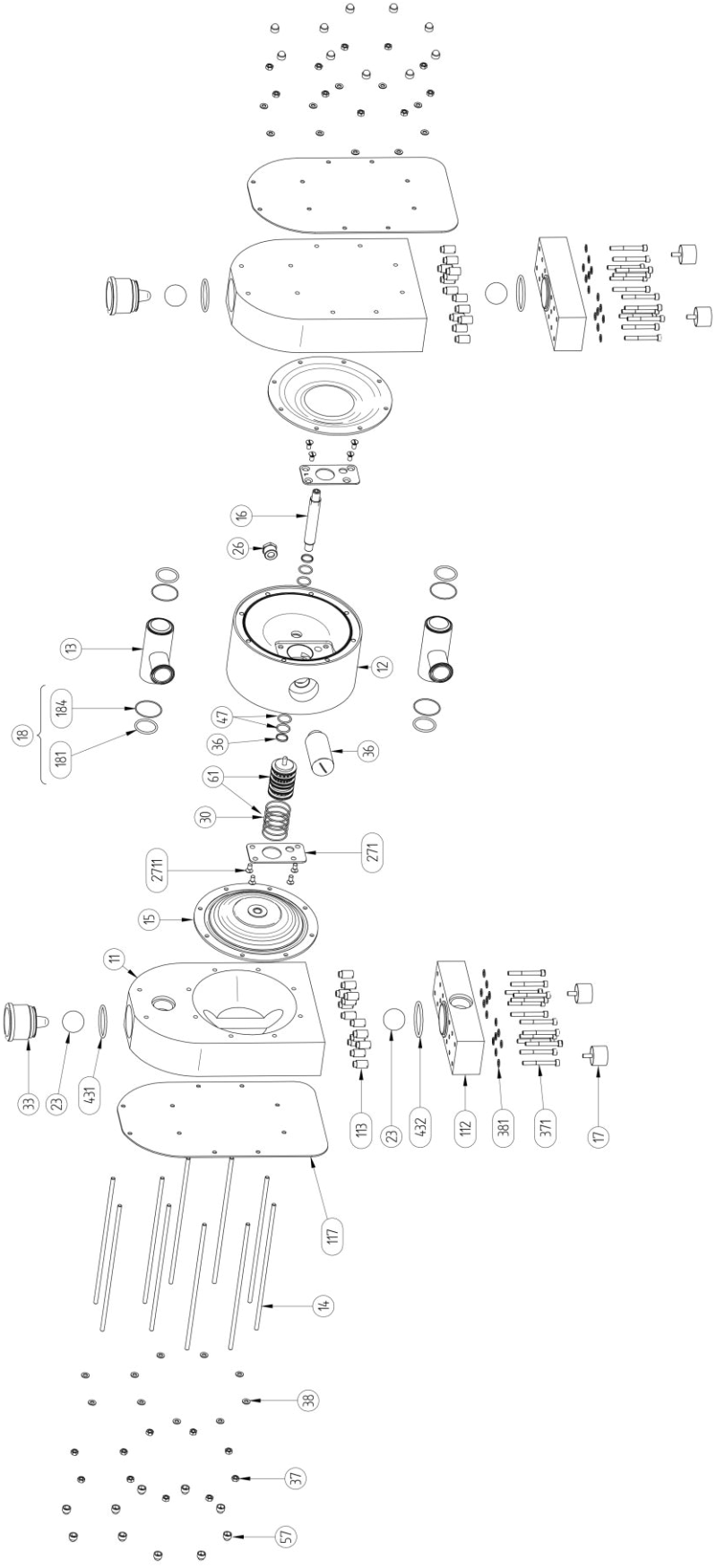

4. SPARE PARTS

4.5. T203 – T403 – Spare parts list

Pos.	Q-ty		Description	Material
	T203	T403		
11	2	2	Upper housing	PP (USP VI approved), PTFE (USP VI approved), PE
112	2	2	Lower housing	PP (USP VI approved), PTFE (USP VI approved), PE
113	28	28	Connecting plugs	PET
117	2	2	Reinforcement plate	AISI 316L
12	1	1	Centre block	PP
13	2	2	In/Outlet	AISI 316L
14	10	10	Pin screw	A4-80
15	2	2	Diaphragm	PTFE / EPDM back (USP VI approved)*
16	1	1	Diaphragm shaft	AISI 304L
17	4	4	Rubber foot	NBR
181	4	4	O-ring (in/outlet)	EPDM (USP VI approved)
184	4	4	O-ring (in/outlet)	EPDM (USP VI approved)
23	4	4	Valve ball	PTFE (USP VI approved)*
25	1	1	Muffler	PP
26	1	1	Air intake adapter	Galvanized brass
271	1	1	Set of mounting plates	AISI 316L
2711	8	8	Mounting plate screws	A4-70
30	6	6	O-ring	NBR
33	2	2	Plug	PP (USP VI approved), PTFE (USP VI approved), PE
36	2	2	Centerblock seal	PE
37	20	20	Nut	A4-70
371	28	28	Socket head cap screw	A4-70
38	20	20	Washer	A4-70
381	28	28	Washer	A4-70
431	2	2	O-ring (plug)	EPDM (USP VI approved)
432	2	2	O-ring (lower housing)	EPDM (USP VI approved)
47	4	2	O-ring (back up for 36)	NBR
57	20	20	Nut cover	PE
61	1	1	Air valve complete	Body: brass (standard), AISI 316L or PET, O-rings: NBR (standard), EPDM or FKM

**Ingredients used for manufacturing of diaphragm liquid contact side and valve balls are USP VI approved*

4.6. T203-T403 – Spare parts – Options

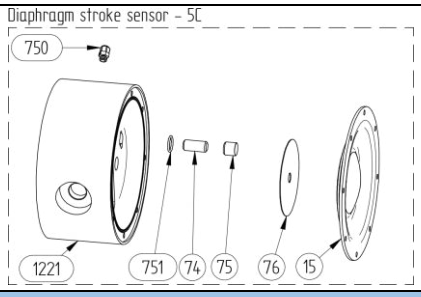

Diaphragm stroke sensor			
121	1	Centerblock for stroke sensor	PP
43	1	O-ring	NBR, FKM, EPDM
74	1	Inductive sensor	CuZn
75	1	Sensor cap	PP
76	1	Sensing plate	AISI 316L
750	1	Cable gland	PP

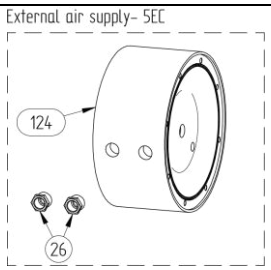

External air supply			
124	1	Centerblock	PP
26	2	Air intake adapter	Brass

4. SPARE PARTS

4.7. Stocking recommendation

Even at normal operation of the pump, some parts can wear down. In order to avoid expensive breakdowns we recommend having a few spare parts in stock.
This is a reason, why we recommended two kinds of spare part sets to be replaced in two time intervals. Note that this is only a recommendation. The characteristics of the liquid, temperature, materials used in the pump and running time decide how often the service intervals are necessary.

	Pos.	Description	Q-ty
Set No 1 (every 6 months)	15	Diaphragm	2
	23	Valve ball	4
	25	Muffler	1
	181	O-ring (inlet/outlet)	4
	184	O-ring (inlet/outlet)	4

	Pos.	Description	Q-ty
Set No 2 (every 1 year)	-	Spare part set No 1	1
	16	Diaphragm shaft	1
	27	Circlip	2
	36	Center block seal	2
	47	O-ring (back up for 36)	2/4*
	431	O-ring	2
	432	O-ring	2
	61	Air valve complete	1

* 2 for 53, 403 **/** 4 for 103, 203

4. SPARE PARTS

4.8. How to order parts

When ordering spare parts for Tapflo pumps, please let us know what is the ***model number*** and ***serial number*** from the pump centre body or housing. Then just indicate the part numbers from the spare parts list and quantity of each item.

4.9. Pump code

The model number on the pump and on the front page of this instruction manual tells the pump size and materials of the pump.

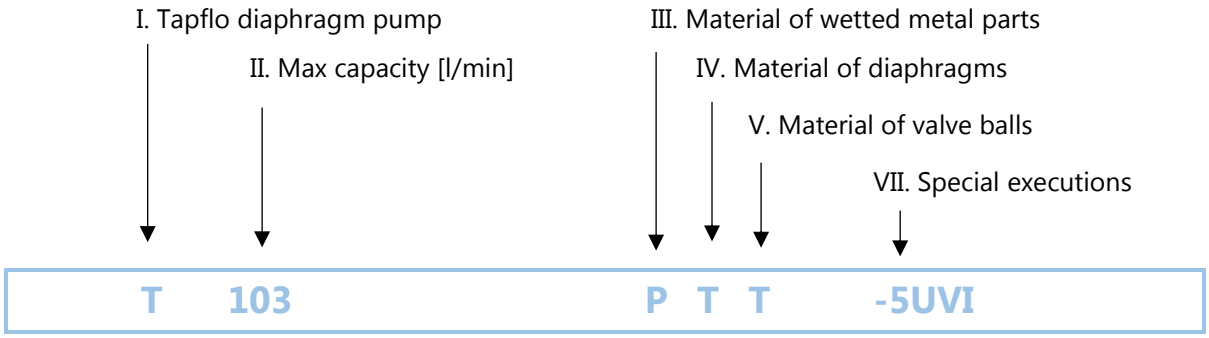

I. T = Tapflo diaphragm pump

III. Material of wetted metal parts:
- P = PE HD1000
- T = PTFE
- L = PP

IV. Material of diaphragms:
- T = PTFE
- B = PTFE TFM 1705b

V. Material of valve balls:
- T = PTFE
- B = PTFE TFM 1635

VI. Special executions:
- 5UVI = USP VI approved
- 5 = Other special executions
- 7 = Optional material of air valve

5. DATA

5.1. Capacity curves

The performance curves are based on water at 20°C. Other circumstances might change the performance. See below how the capacity will change at different viscosities and suction lifts.

Example:
A flow of 30 litre/minute is desired. The discharge pressure is calculated to 25 mWC. We choose a T53 pump. It requires an air pressure of 4 bar and will consume approximately 0.20 Nm^3 of air per minute.

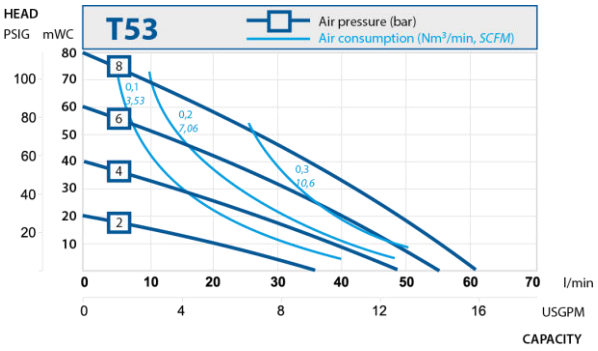

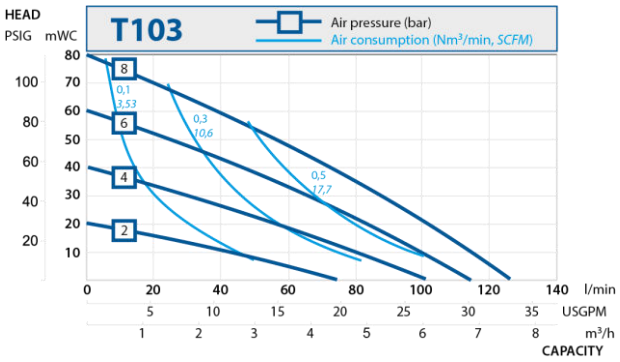

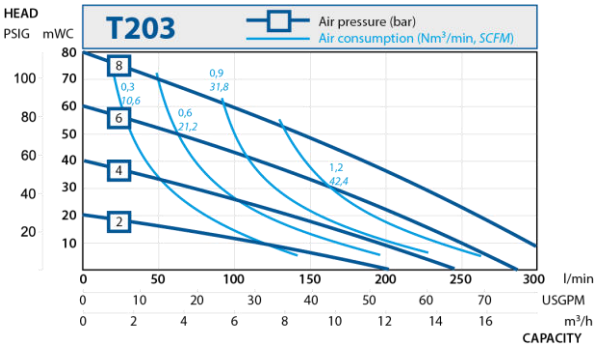

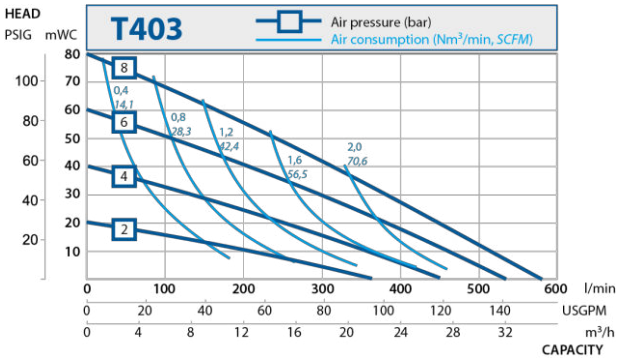

5.2. Capacity changes

Capacity changes at different suction lifts

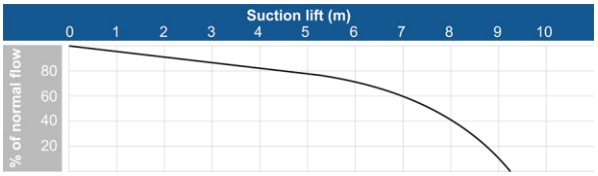

Capacity changes at different viscosities

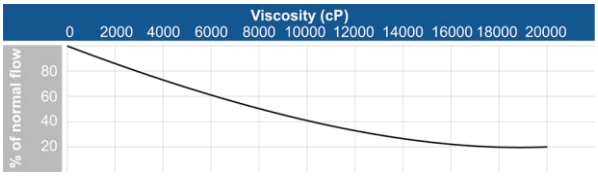

5. DATA

5.3. Technical data

TECHNICAL DATA	PUMP SIZE			
	T53	T103	T203	T403
Max capacity* [l/min] / [US GPM]	60 / 15.8	125 / 33	330 / 87	570 / 150
Volume per stroke** [ml] / [cu in]	151 / 9.21	392 / 23.92	944 / 57.61	2430 / 148.29
Max discharge pressure [bar] / [psi]	8 / 116	8 / 116	8 / 116	8 / 116
Max air pressure [bar] / [psi]	8 / 116	8 / 116	8 / 116	8 / 116
Max suction lift dry*** [m] / [Ft]	2.5 / 8	3.5 / 11	4 / 13	4 / 13
Max suction lift wet [m] / [Ft]	8 / 26	8 / 26	8 / 26	8 / 26
Max size of solids ø in [mm] / [in]	4 / 0.16	6 / 0.24	10 / 0.39	15 / 0.59
Max temp. pump in PE, PP [°C] / [°F]	70 / 158	70 / 158	70 / 158	70 / 158
Min temp. pump in PE [°C] / [°F]	-15 / 5	-15 / 5	-15 / 5	-15 / 5
Min temp. pump in PP [°C] / [°F]	0 / 32	0 / 32	0 / 32	0 / 32
Max temp. pump in PTFE [°C] / [°F]	100 / 212	100 / 212	100 / 212	100 / 212
Weight of pump in PE [kg] / [lb]	5.3 / 11.7	12 / 26.5	23 / 60.7	58.5 / 129
Weight of pump in PP [kg] / [lb]				

* = Recommended flow is half of the max flow, i.e. recommended flow for a T53 is 30 l/min (7.9 US GPM)

** = Based on pumps with PTFE diaphragms. Pumps with rubber diaphragms have higher volume per stroke.

*** = With stainless steel valve balls, other materials may reduce suction. Please consult us in this matter.

5. DATA

5.4. Dimensions

Dimensions in mm (where other is not indicated)
Dimensions in inch (where other is not indicated)
General dimensions only, ask us for detailed drawings. Changes reserved without notice.

Dim	PUMP SIZE			
	T53	T103	T203	T403
A	150	200	270	350
	5.91	7.87	10.63	13.78
B	159	216	323	386
	6.26	8.50	12.72	15.20
C	190	252	349	431
	7.48	9.92	13.74	16.97
D	266	367	487	600
	10.47	14.45	19.17	23.62
E	196	266	351	441
	7.72	10.47	13.82	17.36
F	15	15	30	30
	0.59	0.59	1.18	1.18
G	20	30	30	30
	0.79	1.18	1.18	1.18
H	15	30	31,5	33
	0.63	1.18	1.24	1.30
I	16,5	41	59	64,5
	0.65	1.61	2.32	2.54
J*	¾"	1"	1 ½"	2"
	¾	1	1 ½	2
K	M8x25	M8x25	M8x25	M8x25
	M8	M8	M8	M8
L	¼"	¼"	½"	½"
	¼	¼	½	½
M	40	64	80	100
	1.57	2.52	3.14	3.94
N	117,5	167	208	257
	4.63	6.57	8.19	10.12
P	80	106	142,5	182,5
	3.15	4.17	5.61	7.19
R	15°	15°	0°	0°
	15°	15°	0°	0°

* DIN32676 connection

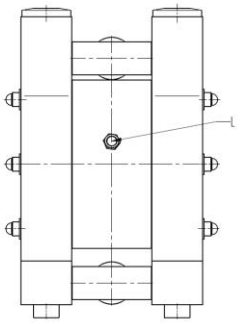

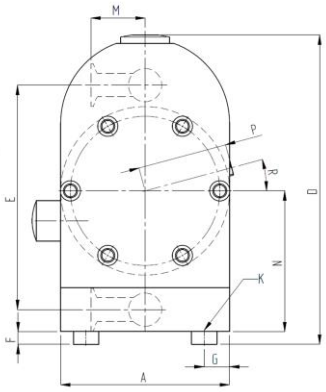

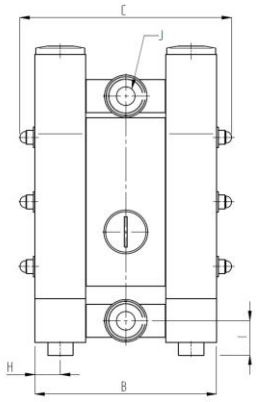

5. DATA

5.5. Tightening torques

Checking of the tightening torques is necessary after all periods of stoppage, when temperature variations are a factor and after all transport and maintenance of the pump. What is more for proper operation and safety the torque values should be checked frequently as part of preventive maintenance (please contact Tapflo for interval proposals).

PUMP SIZE	RECOMENDING MOUNTING TORQUE [Nm]			
	Pos 37 - Nut	Pos 37 – 4 nuts at top of the pump	Pos 371 – Socket head cap screw	Pos 33 - Plug
T53	8	8	4	6
T103	16	16	8	6
T203	20	2	10	6
T403	23	23	12	6

5.6. Permitted loads on manifolds

We recommend not to exceed the following loads and forces reacting on the manifolds.

T53		
Direction	Load [N] (inlet/outlet)	Moment of force (inlet/outlet) [Nm]
X	31	5,3
Y	31	5,3
Z	31	5,3

T103		
Direction	Load [N] (inlet/outlet)	Moment of force (inlet/outlet) [Nm]
X	35	6,1
Y	35	6,1
Z	35	6,1

T203		
Direction	Load [N] (inlet/outlet)	Moment of force (inlet/outlet) [Nm]
X	43	7,4
Y	43	7,4
Z	43	7,4
T403		
Direction	Load [N] (inlet/outlet)	Moment of force (inlet/outlet) [Nm]
X	56	9,6
Y	56	9,6
Z	56	9,6

Pharmaceutical pumps

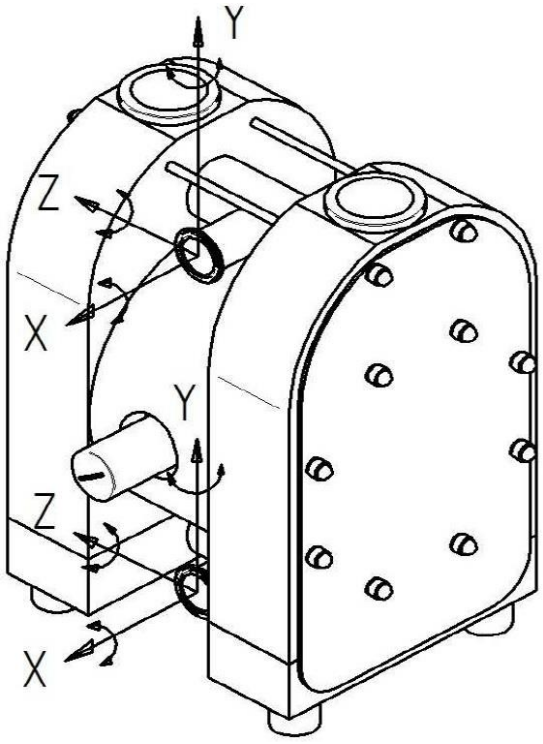

6. WARRANTY

6.1. Warranty form

Company: .....

Telephone: ..... Fax: .....

Address: .....

Country: ..... Contact Name: .....

E-mail: .....

Delivery Date: ..... Date of pump installation: .....

Pump type: .....

Serial No (see name plate or stamped on pump housing): .....

Description of the fault: .....

.....

.....

The installation:

Liquid: .....

Temperature [°C]: ..... Viscosity [cPs]: ..... Spec grav. [kg/m^3]: ..... pH-value: .....

Content of particles: ..... %, of max size [mm]: .....

Flow [l/min]: ..... Duty [h/day]: ..... No of starts per day: .....

Discharge head [mWC]: ..... Suction head / lift [m]: .....

Air pressure [bar]: ..... Quality of the air (filter, micron, lubrication): .....

Other: .....

.....

Place for sketch of installation:

6. WARRANTY

6.2. Returning parts

When returning parts to Tapflo please follow this procedure:

- Consult Tapflo for shipping instructions.
- Cleanse or neutralize and rinse the part/pump. Make sure the part/pump is completely empty from liquid.
- Pack the return articles carefully to prevent any damage during transportation.

Goods will not be accepted unless the above procedure has been complied with.

6.3. Warranty

Tapflo warrants products under conditions as stated below for a period of not more than 5 years from installation and not more than 6 years from date of manufacturing.

1. The following terms and conditions apply to the sale of machinery, components and related services and products, of Tapflo (hereinafter "the products").

2. Tapflo (the manufacturer) warrants that:

    a. its products are free of defects in material, design and workmanship at the time of original purchase;
    b. its products will function in accordance with Tapflo operative manuals; Tapflo does not guarantee that the product will meet the precise needs of the Customer, except for those purposes set out in any invitation to render documents or other documents specifically made available to Tapflo before entering into this agreement;
    c. high quality materials are used in the construction of the pumps and that machining and assembly are carried out to the highest standards.

    Except as expressly stated above, Tapflo makes no warranties, express or implied, concerning the products, including all warranties of fitness for a particular purpose.

3. This warranty shall not be applicable in circumstances other than defects in material, design, and workmanship. In particular warranty shall not cover the following:

    a. Periodic checks, maintenance, repair and replacement of parts due to normal wear and tear (seals, O-rings, rubber items, diaphragms, air valves etc..);
    b. Damage to the product resulting from:
        b.1. Tampering with, abuse or misuse, including but not limited to failure to use the product for its normal purposes as stated at the time of purchase or in accordance with Tapflo instructions for use and maintenance of the product, or the installation or improper ventilation or use of the product in a manner inconsistent with the technical or safety standard in force;
        b.2. Repairs performed by non-skilled personnel or use of non-original Tapflo parts;
        b.3. Accidents or any cause beyond the control of Tapflo, including but not limited to lightning, water, fire, earthquake, and public disturbances, etc.;

6. WARRANTY

4. The warrantee shall cover the replacement or repairing of any parts, which is documented faulty due to construction or assembling, with new or repaired parts free of charges delivered by Tapflo. Parts subjected to normal tear and wear shall not be covered by the warranty. Tapflo shall decide as to whether the defective or faulty part shall be replaced or repaired.

5. The warrantee of the products shall be valid for a period in accordance to the current law from the date of delivery, under the condition that notice of the alleged defect to the products or parts thereof be given to Tapflo in written within the mandatory term of 8 days from the discovery. Repair or replacement under the terms of this warranty shall not give a right to an extension to, or a new commencement of, the period of warranty.

6. Repair or replacement under the terms of this warranty shall not give a right to an extension to, or a new commencement of, the period of warranty. Repair or replacement under the terms of this warranty may be fulfilled with functionally equivalent reconditioned units. Tapflo qualified personnel shall be solely entitled to carry out repair or replacement of faulty parts after careful examination of the pump. Replaced faulty parts or components will become the property of Tapflo.

7. The products are built in accordance with standard CE normative and are tested (where applicable) by Tapflo. Approval and tests by other control authority are for the customer's account. The products shall not be considered defective in materials, design or workmanship if they need to be adapted, changed or adjusted to conform to national or local technical or safety standards in force in any country other than that for which the unit was originally designed and manufactured. This warranty shall not reimburse such adaptations, changes or adjustments, or attempt to do so, whether properly performed or not, nor any damage resulting from them, nor any adaptation, change or adjustments to upgrade the products from their normal purpose as described in the products operative manual without the prior written consent of Tapflo.

8. Installation, including electric and other connections to utility mains according to Tapflo drawings, is for the cost and responsibility of the customer, unless otherwise agreed in writing.

9. Tapflo will not be liable on any claim, whether in contact, tort, or otherwise, for any indirect, special, incidental, or consequential damages, caused to the customer or to third parties, including loss of profits, arising by any possible infringement of par. 3 above or by the customer or third parties being in the impossibility of using the products.

Steady the above, Tapflo liability to the customer or third parties from any claim, whether in contract, tort, or otherwise, shall be limited to the total amount paid by the customer for the product that caused the damages.

TAPFLO AB

Sweden

Filaregatan 4 | S-442 34 Kungälv
Tel: +46 303 63390
Fax: +46 303 19916

E-mail addresses:
Commercial questions: sales@tapflo.com
Orders: order@tapflo.com
Tech support: support@tapflo.com

Tapflo products and services are available in 75 countries on 6 continents.

Tapflo is represented worldwide by own Tapflo Group Companies and carefully selected distributors assuring highest Tapflo service quality for our customers' convenience.

AUSTRALIA | AUSTRIA | AZERBAIJAN | BAHRAIN | BELARUS | BELGIUM | BOSNIA & HERZEGOVINA | BRAZIL | BULGARIA | CANADA | CHILE | CHINA | COLOMBIA | CROATIA | CZECH REPUBLIC | DENMARK | ECUADOR | EGYPT | ESTONIA | FINLAND | FRANCE | GREECE | GEORGIA | GERMANY | HONG-KONG | HUNGARY | ICELAND | INDIA | INDONESIA | IRAN | IRELAND | ISRAEL | ITALY | JAPAN | JORDAN | KAZAKHSTAN | KUWAIT | LATVIA | LIBYA | LITHUANIA | MACEDONIA | MALAYSIA | MEXICO | MONTENEGRO | MOROCCO | THE NETHERLANDS | NEW ZEALAND | NORWAY | POLAND | PORTUGAL | PHILIPPINES | QATAR | ROMANIA | RUSSIA | SAUDI ARABIA | SERBIA | SINGAPORE | SLOVAKIA | SLOVENIA | SOUTH AFRICA | SOUTH KOREA | SPAIN | SUDAN | SWEDEN | SWITZERLAND | SYRIA | TAIWAN | THAILAND | TURKEY | UKRAINE | UNITED ARAB EMIRATES | UNITED KINGDOM | USA | UZBEKISTAN | VIETNAM

Tapflo Group Companies

Australia
Tapflo Oceania (Pty)
Tel: +61 1800 303 633
sales@tapflo.com.au

Austria
Tapflo Austria
Tel: +43 732 27292910
sales@tapflo.at

Baltic States
Tapflo Latvia
Tel: +371 67472205
sales@tapflo.lv

Belarus
Tapflo Belarus
Tel: +375 17 3934609
sales@tapflo.by

Belgium
Tapflo Benelux B.V.
Tel: +31 (0)85 00 743 00
info@tapflo.nl

Bulgaria
Tapflo EOOD
Tel: +359 (2) 974 18 54
office@tapflo.org

Canada
Tapflo Canada
Tel: +1 514 813 5754
canada@tapflo.com

Croatia
Tapflo GmbH
Tel: +385 91 4884 666
sales@tapflo.hr

Czech Republic
Tapflo s.r.o.
Tel: +420 513033924
tapflo@tapflo.cz

China
Tapflo (Wuxi)
Tel: +86 510 8241 7602
sales@tapflo.cn

Denmark
Tapflo Danmark
Tel: +45 36 454600
info@tapflo.dk

France
Tapflo France
Tel: +33 1 34 78 82 40
info@tapflo.fr

India
Tapflo Fluid Handling India Pvt Ltd
Tel: +91 20 65000215
ac@tapflo.in

Ireland
Tapflo Ireland Ltd
Tel: +353 1 2011911
info@tapflo.ie

Italy
Tapflo Italia
Tel: +39 0362307698
info@tapfloitalia.com

Japan
Tapflo Japan K.K.
Tel: +81-3-6240-3510
tapflojp@tapflo.co.jp

Kazakhstan
Tapflo Kazakstan
Tel: +7 727 3278347
sales@tapflo.kz

Netherlands
Tapflo Benelux B.V.
Tel: +31 (0)85 00 743 00
info@tapflo.nl

Poland
Tapflo Sp. z o.o.
Tel: +48 58 530 42 00
info@tapflo.pl

Romania
S.C. Tapflo Rom. S.r.l.
Tel: +40 21 3451255
sales@tapflo.ro

Russia
Tapflo Company
Tel: +7 495 232 18 28
sales@tapflo.com.ru

Serbia
Tapflo d.o.o.
Tel: +381 21 44 58 08
sales@tapflo.rs

Slovakia
Tapflo s.r.o.
Tel: +421 911 137 883
tapflo@tapflo.sk

Slovenia
Tapflo GmbH
Tel: +386 68 613 474
sales@tapflo.hr

Spain
Tapflo Iberica
Tel: +34 91 8093182
avives@tapfloiberica.es

South Africa
Tapflo (Pty) Ltd
Tel: +27 31 701 5255
sales@tapflo.co.za

Turkey
Tapflo Makina Ltd
Tel: +90 216 467 33 11
sales@tapflo.com.tr

Ukraine
TOB Tapflo
Tel: +380 44 222 68 44
sales@tapflo.com.ua

Uzbekistan
Tapflo Uzbekistan
Tel.: +998 712370940
sales@tapflo.uz

United Kingdom
Tapflo (UK) Ltd
Tel: +44 2380 252325
sales@tapflopumps.co.uk