SPXFLOW

INSTRUCTION MANUAL

TopGear TG L/RBS-series

EXPLOSION PROTECTION ACCORDING TO 2014/34/EU (ATEX 114)

A.0101.201 – Atex IM - TG L & RBS4/08.00
EN (09/2019)

ORIGINAL INSTRUCTIONS
READ AND UNDERSTAND THIS MANUAL PRIOR TO OPERATING OR SERVICING THIS PRODUCT.



EAC

CE





Johnson Pump®

Declaration of conformity

according to EC directive 2014/34/EU (ATEX 114)

Producer

SPX Flow Europe Limited - Belgium
Evenbroekveld 2-6
BE-9420 Erpe-Mere
Belgium

Declares hereby that

the following product families, if ordered as Atex pump or Atex pump unit, are meeting the requirements set forth in EC directive 2014/34/EU of 20 April 2016.

If the product is modified without our written permission, or if the safety instructions in the instruction manuals are not being followed, this declaration becomes invalid.

- Product families: TopGear type
  TG L002, TG L004, TG L009,
  TG L018, TG L047, TG L095

  and

  RBS4

- Notified body: RISE Research Institutes of Sweden AB
  P.O. BOX 857
  SE-501 Borås, Sweden

- Tech. File Ref.: JP 03-13227-P02-050215

- Standards: Applicable harmonised standards
  EN1127-1
  EN-ISO 80079-36
  EN-ISO 80079-37

- Marking: The marking includes the  symbol and the technical file reference.

  Special conditions for safe use are specified in the Ex-Instruction Manual.

Erpe-Mere, 16 September 2019

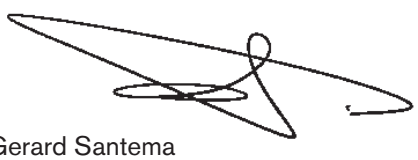

Gerard Santema
General Manager

Table of contents

1.0 General 5
- 1.1 Symbol 5
- 1.2 Safety Information 5
- 1.3 Responsibility for ATEX 114 certification – extend of delivery 5
- 1.4 Marking 6
- 1.5 Atex type designation examples 7
- 1.6 Temperature classes and permissible maximum temperatures 7
  - 1.6.1 II 2G permissible maximum surface temperatures 7
  - 1.6.2 II 2D permissible maximum surface temperature 8
- 1.7 Responsibility 8
- 1.8 Operation 8
- 1.9 Monitoring 9
- 1.10 Residual risks 10

2.0 Performance 11

3.0 Installation 12
- 3.1 Checks 12
- 3.2 Atex 114 certification 12
- 3.3 Working environment 12
- 3.4 Base plate 12
- 3.5 Drive, shaft coupling and protection guard 13
- 3.6 Direction of rotation 13
- 3.7 Piping 13
- 3.8 Double lip seals 13
- 3.9 Check alignment 13

4.0 Commissioning 14
- 4.1 General 14
- 4.2 Precautions 14

5.0 Maintenance 15
- 5.1 General 15
- 5.2 Shaft seal 15

6.0 Limiting risks by means of “check list” 16
- 6.1 During installation 16
- 6.2 Before starting the pump 16
- 6.3 When starting the pump 16
- 6.4 When the pump is running 17
- 6.5 When stopping the pump 17

TopGear TG L and RBS4 – Operating instructions concerning explosion protection

Disclaimer

Considerable effort has been made to ensure that this manual is free of inaccuracies and omissions. However, even though the manual contains up to date data at time of going to press, due to constant improvements some of the data contained herein may not exactly reflect the current model of the particular product described in this manual.

SPX reserves the right to change the construction and design of the products at any time without being obliged to change previous models accordingly.

These instructions contain important and useful information on explosion protection in accordance with EU directive 2014/34/EU (ATEX 114).

All relevant instructions about installation, operation and maintenance of the pump and the pump unit can be found in the separate pump's "Instruction Manual". These instructions should be adhered to at all times!

SPX Flow Europe Limited - Belgium
Evenbroekveld 2-6
9420 Erpe-Mere
Belgium
Tel. +32 (0)53 60 27 15

1.0 General

1.1 Symbol

The following symbol is used to indicate special instructions concerning explosion protection:



1.2 Safety Information

This manual covers the main issues concerning explosion protection and must be used together with the general Instruction Manual for TopGear TG L and RBS4 pumps, called hereafter ‘‘IM’’ and the manuals of other equipment such as gear and motor drives. For explosion protection safety it is imperative that the pump set must be protected from all unauthorised operation and unnecessary wear.

Explosive gas mixtures or concentrations of dust,in conjunction with hot, live and moving parts on pump, gear and motor unit, can lead to severe or fatal personal injuries.

Installation, connection, start-up, maintenance and repair work may only be performed by qualified personnel while taking in account:

- these specific instructions, together with all other instructions for the installed equipment and installation;
- warning and information signs on the equipment;
- the specific regulations and requirements for the system in which the pump unit will operate (current valid national and regional regulations).

1.3 Responsibility for ATEX 114 certification – extend of delivery

SPX will be held responsible only for delivered materials and equipment selected according to the operating conditions data, based on information supplied by the customer or the end user and stated in the order confirmation. When in doubt contact your supplier.

In the event SPX delivers a pump with bare shaft, the explosion protection certification marking on the pump nameplate refers exclusively to the pump part. All other assembled equipment should have separate certification of at least the same or higher grade of protection as the pump, delivered by the supplier(s) of that equipment.
The complete unit must be certified separately by the final assembling manufacturer and must have a separate name plate supplied by the pump unit manufacturer.

In the event SPX delivers a complete unit, the explosion protection certification, and marking on the nameplate attached to the base plate or to the pump frame, will refer to that specific unit.

1.4 Marking

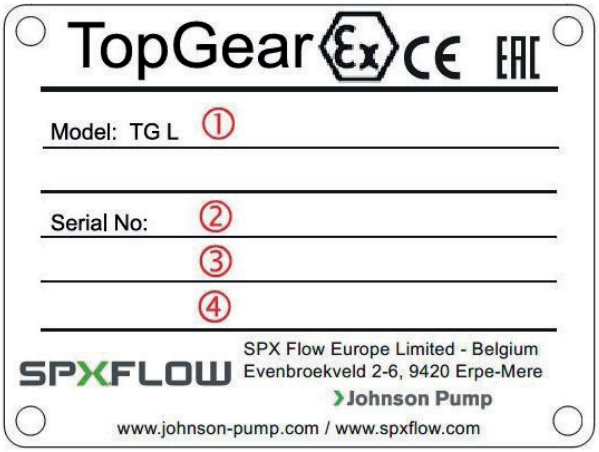

Name plate on the pump and pump unit.

① Pump type: example: TG L002-02V

② Serial No: example: NNNN-xxxxxxx
(NNNN indicates the year of production)

③ Ex marking: examples below, like: Ex II 2G Ex h IIC T4 Gb

④ Tech. File Ref.: reference number: JP 03-13227-P02-050215

1.5 Atex type designation examples

Example 1: Ex II 2G Ex h IIC T4 Gb

II 2G	marking Group II, Category 2, Gas (G) protection
Ex h	marking essential for non-electrical equipment
IIC	explosive group, with subgroup
T4	temperature class T4
Gb	Equipment Protection Level (EPL)

Example 2: II 2D Ex h IIIC 230°C Db

II 2D	marking Group II, Category 2, Dust (D) protection
Ex h	marking essential for non-electrical equipment
IIIC	explosive group, with subgroup
230 °C	for maximum surface temperature of 230 degrees Celsius
Db	Equipment Protection Level (EPL)

Environment temperature should be between -20°C and +40°C, if not, the corresponding environment temperature will be indicated on the nameplate.

1.6 Temperature classes and permissible maximum temperatures

In normal operation the highest temperature on the surfaces of the pump should correspond to the highest temperature of the pumped medium. The maximum permissible temperature depends on the temperature class (T4 to T1) or on T_{max} to be complied with.

1.6.1 II 2G permissible maximum surface temperatures

		TG L	RBS4
EN 13463-1 Temperature class	**Max. temperature T_A Pumped medium**	**Measured spot temperature Pump body**	
T1 – 450°C	≤ 450°C	<< 450°C	n/a
T2 – 300°C	≤ 300°C	<< 300°C	n/a
T3 – 200°C	≤ 200°C	<< 200°C	n/a
T4 – 135°C	≤ 135°C	<< 135°C	n/a

When the temperature limits are reduced, the maximum allowable surface temperature T_{max} will be suppplied instead of the temperature class, the same was as in case of D, dust protetion.

Permissible temperature class is directly related to the liquid temperature.

For T5 (100°C) and T6 (85°C) classes and if ambient temperature exceeds the range -20°C / +40°C please contact you supplier.

1.6.2 II 2D permissible maximum surface temperature

The temperature limit T_{max} is stated on the name plate.
T_{max} is determined as the lowest temperature obtained in comparisons:

- T_{max} = temperature limit that follows from the pump selection (seal variants).
- $T_{max} = T_{5mm}$ - 75°C (T_{5mm} "annealing temperature of a dust layer of 5 mm")
- T_{max} = 2/3 x $T._{Cl}$ (T_{Cl} "ignition temperature of a dust cloud").

Remark:
T_{5mm} and T_{Cl} are to be determined by the customer/user in case of dust (D) protection.
In case the ambient temperature exceeds the range of -20°C / +40°C contact your local distributor.

1.7 Responsibility

It is the responsibility of the operator to ensure specified liquid temperatures are not exceeded and to ensure regular inspections and maintenance for good operation of the shaft seal, the bearings and the internal pump parts. If this cannot be ensured by the operator, suitable monitoring facilities must be provided, see paragraph 1.9.

1.8 Operation

- For explosion protection it is imperative that the gear pump will not run completely dry. The interior of the pump, including shaft seal chamber and auxiliary systems, must be filled completely with, and lubricated by the product to be handled during operation (including start-up, priming and shut-off).
- In case of self priming the pump must be filled with liquid and the appropriate shaft sealing (quenched shaft seal) must be selected and controlled with regard to the quench liquid.
- The pump must never be operated continuously with the safety relief valve opened. The relief valve is designed as a safety device in case of over-pressure and shall not be used for flow control.
- When flow control is performed by by-passing the liquid, it must return directly to the suction tank and not to the suction port of the pump. Otherwise heat accumulation in the pump could create a dangerous situation.
- The pump should never operate with closed valves.

1.9 Monitoring

If proper functioning and maximum allowable surface temperatures cannot be ensured by regular inspection by the operator, suitable monitoring devices must be provided for.

Surface temperature sensors should be applied in the following areas, see figure 1:

- Surface temperature of the pump casing at the top of inlet flange (L1).
- Surface temperature at the gland end, gland packing or mechanical seal (L2). In case of a quenched/lip seal, monitoring can be done by checking the quench fluid.
  Use of a quenched lip seal is recommended when there is a risk of dry running or risk for lubrication failure of the mechanical seal such as in case of self priming.

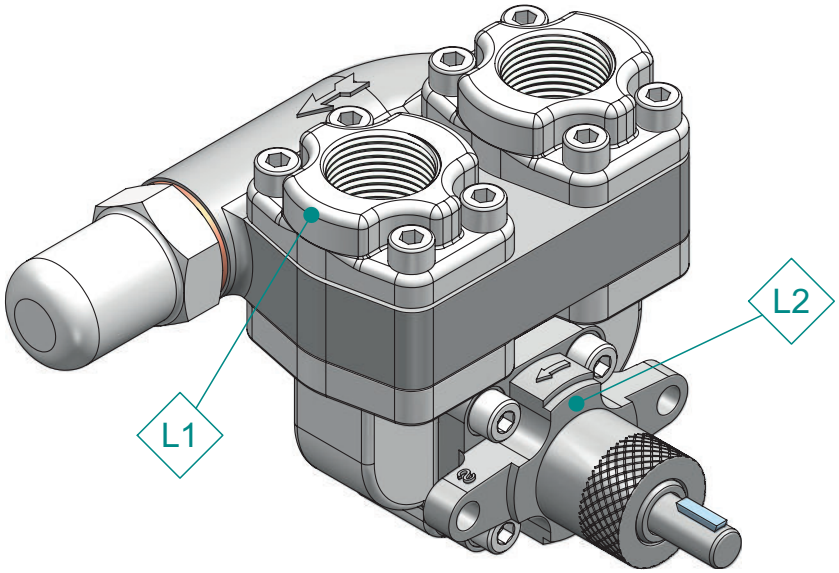

Fig 1 – Locations of temperature sensors (optional)

The maximum allowable surface temperature of L1 and L2 refers to T_A (pumped medium temperature).

1.10 Residual risks

List of residual risks (after risk analysis according to EN ISO 80079-36).

Potential ignition source			Measures applied to prevent the source becoming effective	Ignition protection used
Normal operation	**Foreseeable malfunction**	**Rare malfunction**		
Exposed to hot surfaces of pump casing			Customer has to ensure that the temperature of the pumped liquid does not exceed the permissible temperature limits. Additionally, the operator has to ensure that the operating limits for speed, flow and pressure are not exceeded.	EN ISO 80079-36 §6.2 User Instruction
	Excessive heat accumulation		Customer has to ensure a minimum flow through the pump and the pipe system to evacuate generated heat or to monitor the surface temperature of the pump casing, i.e. it is not acceptable to rely on the recirculation flow from a safety valve. The only purpose with safety valve is to prevent excessive rupture pressure.	EN ISO 80079-36 §6.2 EN ISO 80079-37 §5.7 User Instructions
Exposed to hot surface of intermediate casing			Intermediate casing must be freely exposed to the atmosphere to allow cooling of the surfaces. Operator must regularly check temperature for good operation and the temperature of the intermediate casing.	EN ISO 80079-36 §6.2 EN ISO 80079-37 §5.7 User Instructions
		Internal high temperatures and/or sparks	Dry running is excluded from normal operation. Operator has to ensure that the pump runs with the shaft sealing chamber filled with the pumped liquid during start, normal operation and shut-off.	EN ISO 80079-37 §5.6 & §5.7 User Instructions
	Excessive heat at shaft sealing, packed gland type		Operator has to ensure good lubrication of the packing rings and must regularly inspect the surface temperature and function. Dry running is excluded from normal operation.	EN ISO 80079-37 §5.3 User Instructions
	Excessive heat at shaft sealing, mechanical seal type		Customer has to follow the specific instructions for the mechanical seal type in the instruction manual or/and separate certificate instructions if present. Double lip seals with quench/flush are to be protected by controlling the quench/flush liquid. Dry running is excluded from normal operation.	EN ISO 80079-37 §5.3 User Instructions
		Electrostatic discharges	Customer should provide earth connections or equipotential bridges in case of indirect risks.	EN ISO 80079-36 User Instructions
		Mechanical sparks caused by contact between rotating shaft and stationary seal gland	If the stationary seal gland has been damaged by outer force, the clearance between shaft and gland must be dealt with at once	

Remarks:

- For both category 2 and 3 the risk under ‘‘rare malfunction’’ must not be controlled.
- For category 2, the risks at “normal operation” and those at “unforseeable malfunction” have to be controlled.
- For category 3, the risks at “normal operation” have to be controlled.

2.0 Performance

- Operation of the pump outside its specified operating range and unauthorised modes of operation may result in the specified temperature limits being exceeded. See IM for temperature limits.
- In order to remove the heat generated by hydraulic and mechanical friction inside the pump, it must be assured that there is always a sufficient minimum flow through the pump. If this cannot be ensured under all possible operating conditions or because the conditions might change over time due to wear, we advise to foresee a suitable temperature monitoring device. (See chapter 1.9)

Note: *Internally produced friction heat depends of pump speed and of the properties of the pumped media: viscosity, specific heat, lubricating properties etc. It is the responsibility of the operator to ensure that the pump operates below the allowable temperature limits as indicated above.*

Dangerous situations can occur in the following events and should be prevented and/or excluded from normal operation and expected operation (group II-category 2) by adequate operation, supervising and maintenance:

- Running the pump without liquid will produce extra heat in the sleeve bearings and on other friction sensitive parts. Temperature can rise above allowable limits as a result of insufficient lubrication and/or lack of heat expulsion through liquid flow. Insufficient lubrication can cause preliminary pump wear and failure.
- Heat accumulation can be caused by direct return of liquid from discharge side to suction side of the pump.
  The pump temperature could increase above allowable limit when the pump is operating with the relief valve opened for a length of time or during flow control when by-passing the medium to the suction side of the pump.
- Increase of internal slip by internal wear in such a way that the output flow rate will become insufficient to evacuate the internal friction heat. Temperature could increase above allowable limit.
- Monitoring of the surface temperatures of the pump casing at indicated areas (see figure 1) and controlling or monitoring the quench medium in case of a quenched shaft seal ensures sufficient protection against potentially dangerous situations.

3.0 Installation

3.1 Checks

Before installation, the equipment must be checked.

- Ensure the equipment data (as indicated on nameplate, documentation etc.) corresponds to the explosive atmosphere zone, category and system requirements.
- Possible damage: the installed equipment must be undamaged and must have been properly stored before installation (for maximum 3 years). In case of any doubt or any damage found contact your local supplier.
- Ensure that heated air from other units will not affect the environment of the pump unit; environment air should not exceed a temperature of 40°C.

3.2 Atex 114 certification

All additional equipment such as shaft couplings, guards, drive, motor, auxiliary equipment etc. must be part of the Atex 114 certification or must be certified separately for the appropriate temperature category. The assembled pump unit must have a separate certification and a separate nameplate supplied by the pump unit manufacturer.

3.3 Working environment

- The pump and unit must be accessible for maintenance and inspection during operation, see IM.
- Unobstructed air supply to the pump, drive and motor should be ensured.
- An electric motor should have a free inlet for cooling air of at least 1/4 of its motor diameter.
- The pump should be mounted horizontally. Deviation from the prescribed installation will influence draining, filling, venting and good functioning of the shaft seal.
- The bearing bracket must be exposed to the atmosphere to allow cooling and to ensure good functioning and lubrication.
  Insufficient cooling could lead to unacceptable surface temperatures of the bearing bracket, to insufficient lubrication and to premature bearing failure. If proper cooling cannot be maintained all the times, monitoring of the surface temperature of the bearing bracket should be ensured.
- Proper separate earthing facilities should be provided close to the pump unit baseplate.
- In hazardous areas the electrical connection has to be IEC60079-17 compliant.
- The execution of the temperature monitoring equipment must fulfill the requirements of RL94/EG.

3.4 Base plate

- The baseplate must always be provided with an earthing boss.
- Ensure that the earth circuit is properly connected to the baseplate.

3.5 Drive, shaft coupling and protection guard

- The starting torque of an internal gear pump is almost identical to the nominal torque during operation. The starting torque of the motor must be sufficiently high: the motor power is selected 20% to 25% higher than the absorbed power of the pump. If the starting torque is too low it will take longer to start the pump and the motor temperature could increase to an unacceptable level. When using a variable speed motor the cooling device of the motor must operate independently from the motor speed or must be guaranteed to be sufficient at its lowest speed.
- Follow the separate instructions for gear and motor drive and for explosion protected shaft couplings.
- When using a belt drive (in case of TG L095-03FK), ensure that the belts have sufficient electrical conductivity to avoid electrostatic loads. Use only belts with electrical leakage resistance lower than 10^9 Ohm and avoid using aluminum or light metal pulleys containing more than 7.5% magnesium.
- Certification of the protection guard must be included in the explosion protection certificate of the drive or pump unit or should be certified separately by the manufacturer or supplier of the guard. The coupling guard must be made of non-sparking materials. **Never use light metals containing more than 7.5% magnesium!** In case of aluminium coupling parts, the coupling guard must be made of brass.

3.6 Direction of rotation

- Gear pumps can run in both rotation directions: ensure that the relief valve or top cover is set to the right direction of rotation, see IM.
- The pump units' direction of rotation should be tested with the pump filled only, to avoid dry running.



- If necessary the direction of rotation of the motor should be tested independently from the pump i.e. not coupled to the pump. Remember to secure or remove the shaft key in case of separate testing.

Always align the coupling after having disassembled it and refit the coupling guard!

3.7 Piping

The suction and discharge lines should be designed properly for the required performance conditions and should be executed accordingly, see IM. Non compliance to the working conditions of the pump unit can cause severe problems such as NPSH-problems, vapour lock, excessive vibrations and premature pump failure. Lines should be checked on dimensions and tightness under pressure and should be internally cleaned and be free of welding and foreign particles before they are connected to the pump.

3.8 Double lip seals

To ensure proper lubrication and cooling of the lip seals the quench/flush chamber between the lips always must be filled with liquid. The quench/flush liquid must be compatible with the liquid being pumped. See IM.

3.9 Check alignment

After installation the alignment of the pump shaft and drive shaft must be checked, preferably with the pump and the pipes completely filled with liquid, and must be corrected if necessary.

4.0 Commissioning

4.1 General

Take note that the TopGear pump is a Positive Displacement pump and procedures may often differ from procedures commonly used for centrifugal pumps. Follow the instructions and checklist given in the Instruction Manual (IM) and the separate instructions for gear and motor drives.

Ensure that all the shut-off valves are fully opened and the strainers are unclogged before starting up the pump.

4.2 Precautions

For explosion protection the following precautions are of importance:

- Ensure that the area around the pump and the pump unit is clean.
- Ensure that the suction line is fitted securely and tight and is clean. Welding particles must be removed in advance.
- The pump, the shaft sealing area and the auxiliary equipment must be vented and filled with the product to be pumped before any operation.
- In case of self-priming, dry running of the pump must be avoided.
- Determine the direction of rotation with the motor disconnected from the pump or ensure that the pump is filled up and vented before start-up.
- Ensure the shutoff valves in the suction and discharge lines are opened at start-up.
- In case the pumped liquid needs to be heated, ensure the pump, shaft sealing area and the product to be pumped are sufficiently preheated before start-up.
- Shut down the pump immediately in the event of irregular operating modes or malfunction.
- Shut down the pump in case the flow drops or the pump pressure changes abnormally (i.e. lower or higher pressure). A flow decrease or pressure change is often a sign of malfunction, a clogged strainer or internal wear. The cause must be found and repaired before the pump should be started again, see the Trouble Shooting List in the IM.

5.0 Maintenance

5.1 General

- Pumps certified for ''Explosion protection'' need maintenance and precaution to prevent risks of ignition due to malfunction and unacceptable wear.
- Follow the maintenance instructions given in the Instruction Manual (IM). Follow the separate instructions for gear and motor drive as well.
- A decrease of flow rate (or in case the pump does not supply the required pressure) is an indication of a possible malfunction or a sign of internal pump wear and requires maintenance or repairs. Other indications of internal pump wear is excessive noise during operating, vibrations or shaft seal leakage.
- Use anti-sparkling tools when working on the pump or pump unit in a potentially explosive atmosphere.

! Only use a damp cloth for cleaning all surfaces.

5.2 Shaft seal

- The correct function and lubrication of the shaft seal must be checked regularly and dry running must be prevented. Gland packing must have a small, visible leakage.
- Several types of connections can be made to ensure proper liquid circulation, venting and lubrication, see IM.
- For single shaft seals, such as gland packing or a single mechanical seal, the operator must ensure that the temperature of the seal area surfaces will not exceed the allowable temperature. If this cannot be ensured by the operator, monitoring devices should be installed.
- Quenched lip seals have to be protected by controlling the quench liquid:
  - Check the level in the supply reservoir;
  - Check the temperature of the quench liquid;
  - Check the condition of the quench liquid by inspection: change the quench liquid in case it is heavily contaminated with leaking fluid.

  Note: *Frequent contamination is an indication of an unacceptable shaft seal leakage, which should be repaired.*

6.0 Limiting risks by means of “check list”

6.1 During installation

- Check that the pipes are correctly connected and self supported. The pipe system should not exert excessive forces on the pump connections during operation, including weight of liquid, reaction forces and thermal expansion – have separate pipe supports and compensators been provided for?
- Check the flange seals on the suction and pressure pipes.
- Check auxiliary circuits to seal system such as heating device, quench and flushing solutions.
- Check that no solid particles can enter into the pump – pipes must be cleaned after welding, possible presence of residues in the pipes must be eliminated.
- Check the rotating direction of the motor, after completed installation, in relation to the suction and pressure direction of the pump. Perform the test with the motor detached from the pump.
- Check the alignment of the rotating parts between motor and pump after complete installation.
- Check that the pump unit (motor, pump and baseplate) is thoroughly earth grounded.
- Check the status on all electrically/ electronic devices such as sensors, data loggers, frequency converters etc are in accordance with the applied ATEX regulation.

6.2 Before starting the pump

- Have all plugs and connections been sealed and tightened?
- Have the screws of the pump flanges been tightened?
- If relevant, is the safety valve trimmed for the right pressure?
- If relevant, have the pump been sufficiently warmed up before start up?
- Has thermal expansion or contraction of the liquid been provided for when heating up or cooling down.
- If relevant, is the installation and operation of the quench respectively the flushing system of the pump seal arrangement overlooked and tested?
- Have the protections against rotating parts been correctly mounted?
- Are the suction and pressure valves opened?
- Is the pump completely filled up with liquid if single seal arrangement is installed?
- Is the quench or the flushing system in proper operation if pump starts dry?

6.3 When starting the pump

- If relevant, start up auxiliary equipment, e.g. quench or flushing pressure and flow.
- Check that the pumps outlet and inlet valves are opened.
- Start up with sufficient start-up torque.
- Start up at low speed if speed regulator is used.
- Stop the pump if the safety valve opens or the outlet pressure rises too high.

6.4 When the pump is running

- Never close completely the suction valve or regulate the capacity/pressure by means of it.
- Never close outlet valve completely without a safety valve installed – stop the pump by electrically disconnect the motor.
- Check the correct operation of the auxiliary circuits, including: quench, flushing, heating.
- Check for leakage and apply measures if necessary.
- Clean up any leakage and trace the cause of it.
- Check and evaluate regularly the data relevance from installed sensors.
- Regularly check and clean up dust accumulation on the pump unit and its surroundings.
- Regularly check and take measures for abnormal vibrations on the pump unit and the pipe system.

6.5 When stopping the pump

- The pump can run as a turbine, if check valve is not installed, on the influence of a static or accumulated pressure difference, in which the liquid flows back towards the suction side; put measures in place if this is not acceptable.
- Allow for thermal expansion or shrinkage of the liquid when heated up or cooled down.
- Try to stop the pump slowly and/or with reduced flow to avoid pressure transients (high energetic pressure spikes) in the pipe system.

NOTES

NOTES

TopGear
TG L / RBS-series

EXPLOSION PROTECTION ACCORDING TO 2014/34/EU (ATEX 114)

SPXFLOW

SPX Flow Europe Limited - Belgium
Evenbroekveld 2-6
9420 Erpe-Mere
Belgium
P: +32 (0)53 60 27 15
E: johnson-pump@spxflow.com

SPX FLOW reserves the right to incorporate our latest design and material changes without notice or obligation. Design features, materials of construction and dimensional data, as described in this bulletin, are provided for your information only and should not be relied upon unless confirmed in writing.

Please contact your local sales representative for product availability in your region. For more information visit www.spxflow.com.

ISSUED 09/2019 A.0101.201 EN
COPYRIGHT ©2005, 2009, 2010, 2013, 2015, 2017, 2019 SPX FLOW Corporation