SPX®

MCV - MCH - MCHZ

Multistage pumps





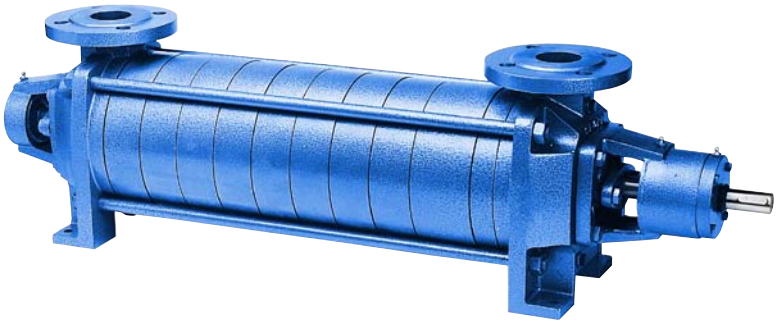

CE Ex

Johnson Pump®

SPX has many years experience in designing, manufacturing and maintaining self-priming centrifugal pumps for contaminated liquids. On the basis of this experience, the FreFlow pumps were developed to cover a broad field of applications. High priority has been given to the design ensuring easy operation and amazing reliability.

Based in Charlotte, North Carolina, SPX Corporation (NYSE: SPW) is a global Fortune 500 multi-industry manufacturing leader. The company's highly-specialized, engineered products and technologies serve customers in three primary strategic growth markets: infrastructure, process solutions and diagnostic systems. Many of SPX's innovative solutions are playing a role in helping to meet rising global demand; particularly in emerging markets for electricity, processed foods & beverages and vehicle services. The company's products include thermal heat transfer equipment for power plants; power transformers for utility companies; process equipment for the food & beverage industry; and diagnostic tools and equipment for the vehicle service industry. For more information, please visit http://www.spx.com

You can put pressure on them!

We offer you a range of reliable high-pressure multistage pumps. It includes a series of horizontal pumps, **MCH** and a series of vertical pumps, **MCV**. The horizontal types can also be supplied in a self-priming version, **MCHZ**..

The pumps consist of an inlet and outlet casing and a number of stages in between them. Each basic type is designed with a number of pressure stages. A pressure stage consists of radial diffusor channels and a matching impeller.

Flange dimensions, bolt circle and number of holes are according DIN 2535 ND 40.

The horizontal pumps are driven by a standard IEC foot motor. The vertical pumps are driven by a standard IEC flange motor, which is connected to the lantern piece of the pump. A fitting edge ensures that alignment is not required. For all pumps the power is transmitted through a flexible coupling.

Due to the modular design there is a high level of interchangeability of parts between the multi-stage pump types.

Shaft sealing options available are mechanical seals as well as gland packing.

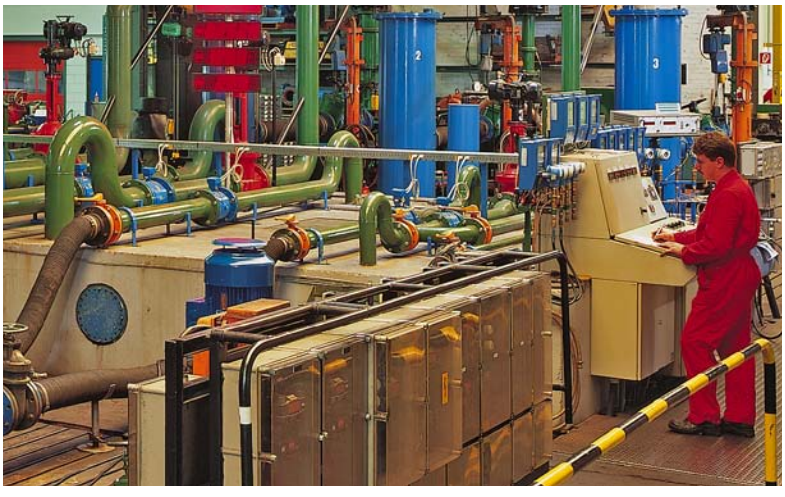

Test bed SPX Flow Technology in Assen, the Netherlands

ISSUED 12/2012 JP-MCV-MCH-MCHZ-EN

Multi-stage pump types

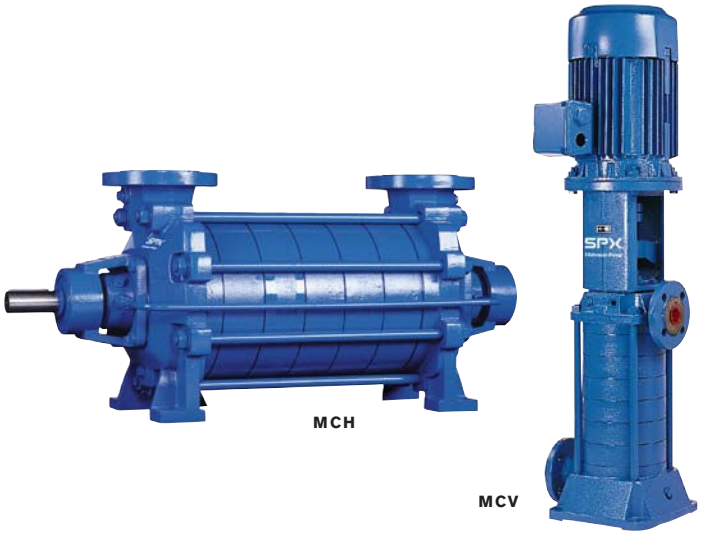

MCH

MCV

TYPICAL CHARACTERISTICS

- Rigid, reliable construction
- Available in cast iron and bronze
- High pump efficiency
- Suitable for a wide range of duties
- Low maintenance cost
- Including a self-priming version
- Shaft sealing by means of mechanical seal or gland packing

TECHNICAL DATA	
MAX. CAPACITY	**100 M³/H**
MAX. HEAD	**340 M**
MAX. WORKING PRESSURE	**40 BAR, MINUS 3x INLET PRESSURE**
MAX. TEMPERATURE	**-20 °C / + 150 °C**
MAX. SPEED	**3600 RPM**

Typical product applications

Proven quality all over the place!

Utility

Multistage pumps are used for pressure booster sets for water supply in high rise buildings. They are used for sinking piles by water injection on building projects. Other main duties comprise fire fighting units.



General industry

In general industry typical applications are pumping of condensate and boiler feeding, circulation of hot water or cooling water.



Shipbuilding

Multistage pumps can handle fresh water as well as sea water, both clean and slightly contaminated. Their compact, space saving build makes them ideal pumps for engine rooms and general duties.



Features and *benefits*

BEARING HOUSING

- fitted with 2 apertures
- *easily accessible gland housing*

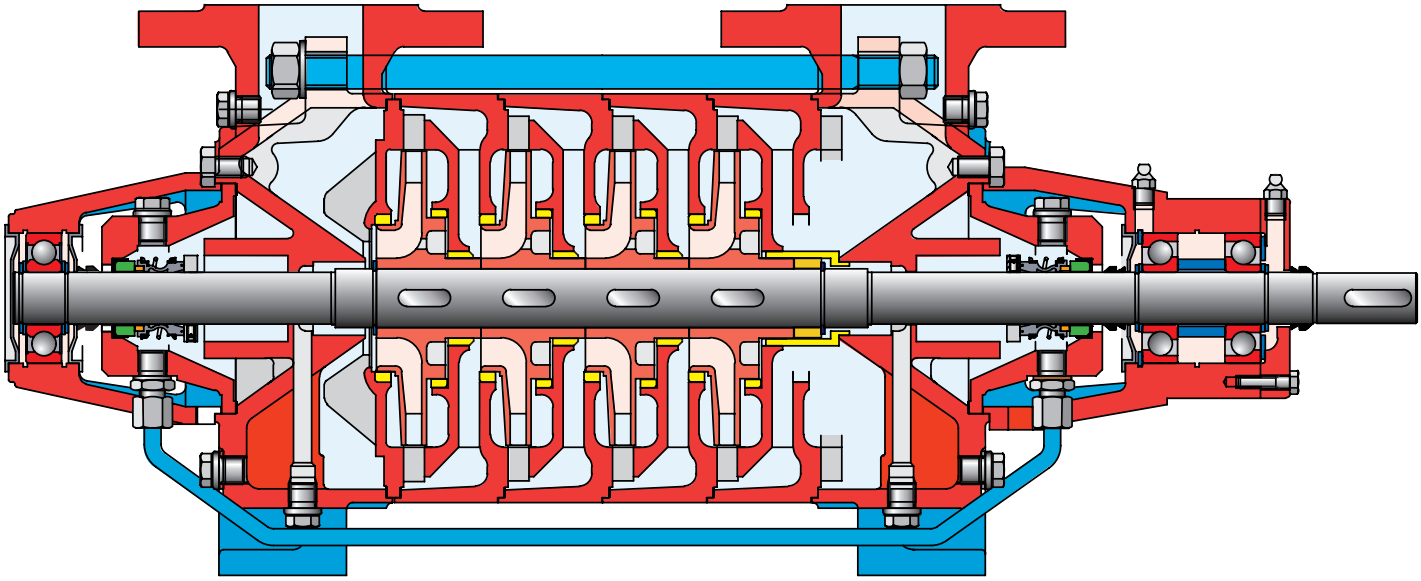

MCH

MCH FEET

- pump casing support in vertical centre line with flange and piping
- *optimal distribution of forces*

WEARRINGS

- on all stages casing wearrings are applied
- *increased maintainability*

MCHZ SELF-PRIMING SECTION

- contains a built-in vacuum pump
- operates according to the liquid ring principle
- *always ready for immediate duty*
- *good air and gas handling, discharged immediately via the pressure pipe*

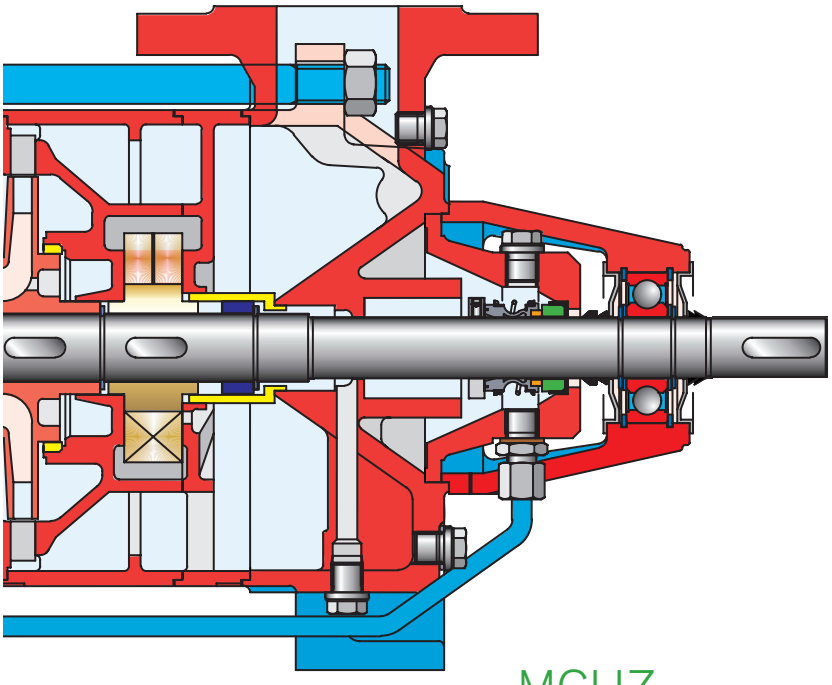

MCHZ

PUMP CASINGS

- cast flanges on suction and pressure casing
- cast foot on MCV suction casing
- fitted with connections for pressure gauge, balance line, possible barrier liquid and drain
- *versatile casing design*
- *very rigid and durable construction*
- *exact positioning in pipework*

SUCTION COVER

- with 2 anti-rotation vanes located in front of the first impeller
- *prevents for turbulence at impeller entry*
- *better NPSHr values*

IMPELLERS

- closed impellers
- designed with 2 sealing edges and balance holes
- *better hydraulic performance*
- *axial forces reduced to a minimum*

BEARING

- axially mounted bearing
- *absorbing the remaining axial thrust*

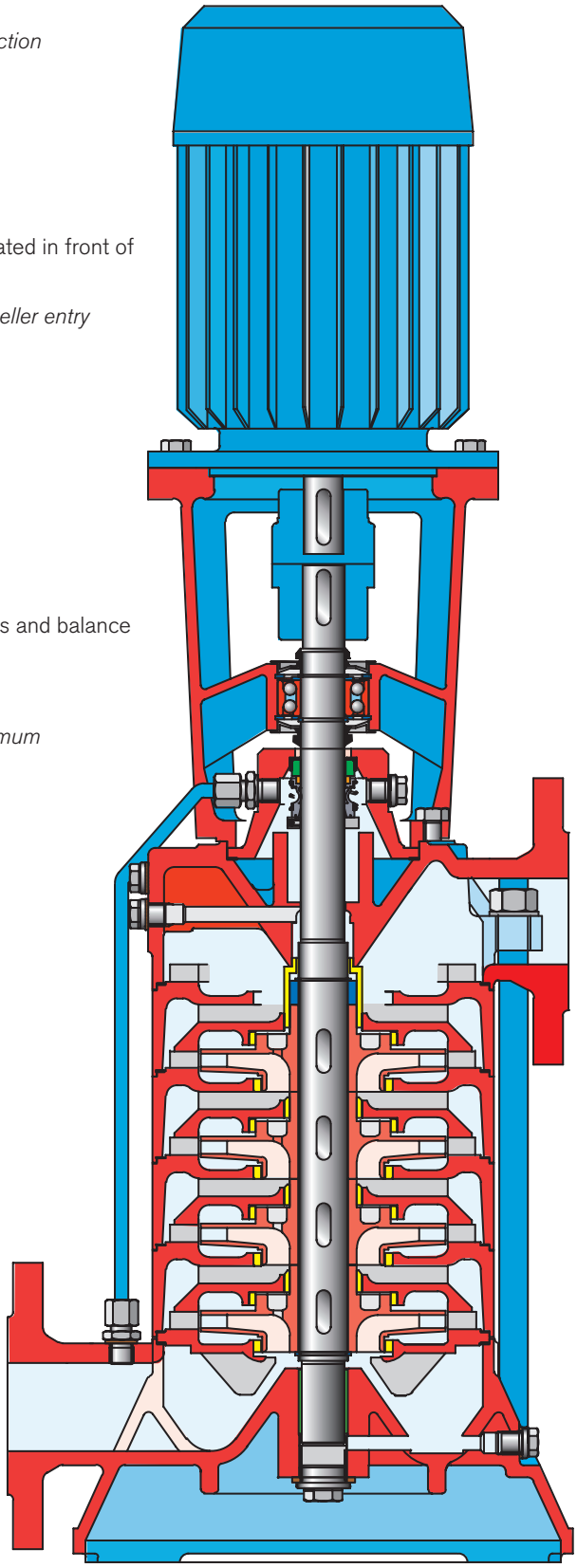

STAGE CASINGS

- fitted with exchangeable wear rings
- with radial diffusors
- *longer pump life*
- *minimal radial forces resulting in low vibration*

MCV CONNECTION

- pressure flange can be fitted in 4 ways
- *versatile connection possibilities*

MCV SLIDE BEARING

- lubricated by the pumped liquid
- fitted in the inlet casing
- *requires no maintenance*

MCV

Shaft sealing

Shaft sealing is available in two variants:

- Standardized gland packing rings. When the pressure in the gland becomes too high the pumps are provided with a balance pipe. For the horizontal pump types a water cooled stuffing box is optional.
- Mechanical seal with bellows. Cooling and lubrification of this seal is achieved by circulation of the pumped liquid via a balance pipe.

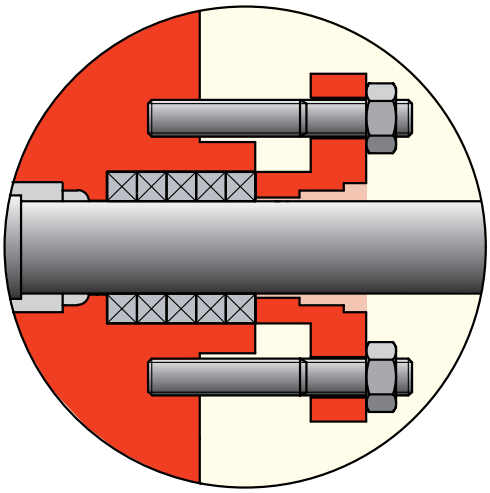

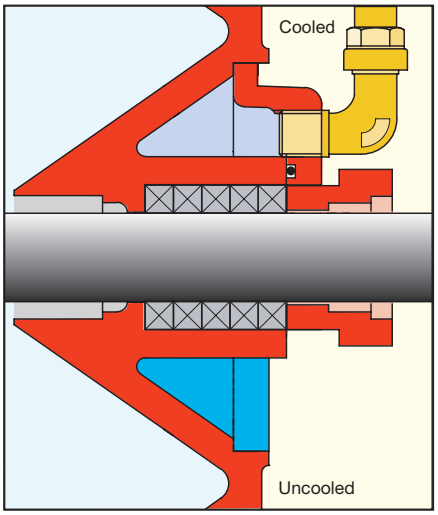

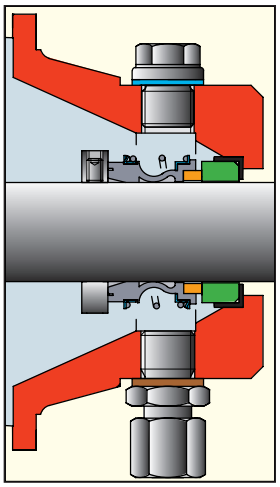

Bearing

- The horizontal pumps are designed with 2 deep-groove ball bearings. The largest types have a double-row angular contact bearing on pressure side. MCH 14 can be supplied with a reinforced bearing, consisting of 2 singlerow angular contact bearings on pressure side. The bearing on pressure side is axially fixed.
- The vertical types are fitted with a double-row angular contact bearing which is axially fixed in the lantern piece. MCV 16 has a deep groove ball bearing.
- All bearings are grease-lubricated.
- In the suction casing the MCV types have a slide bearing, lubricated by the pumped liquid.

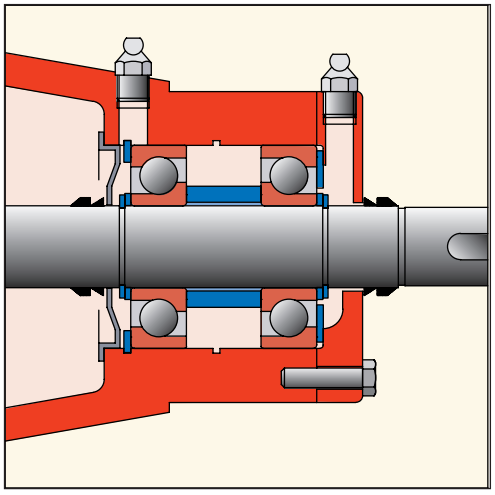

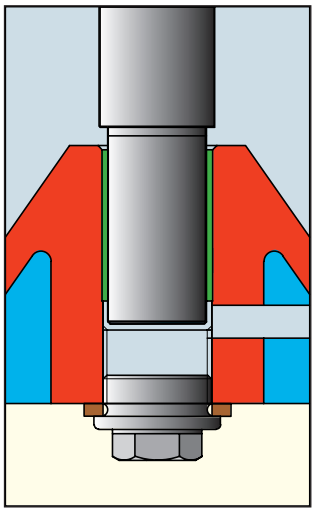

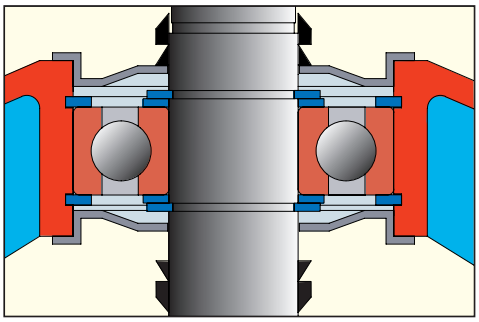

Performance

= *limits MCV*
= *limits MCHZ*
= *limits MCH*

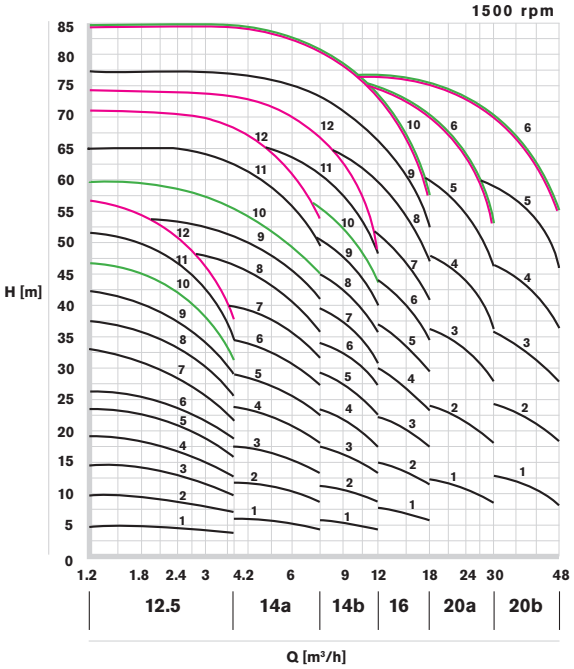

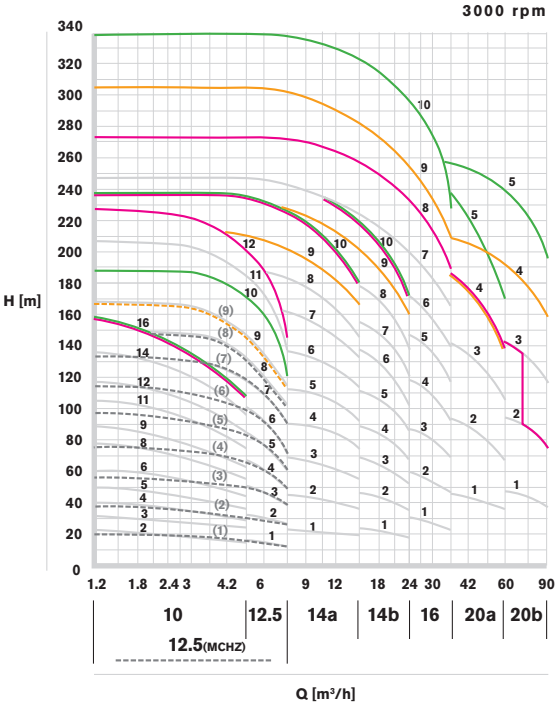

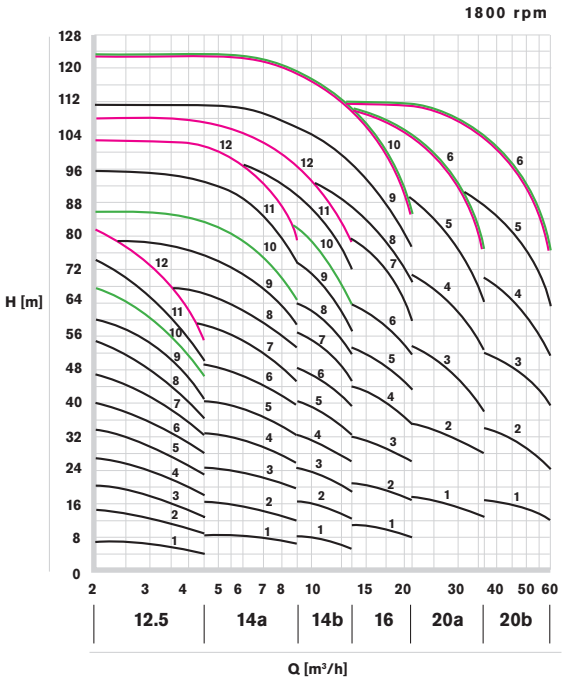

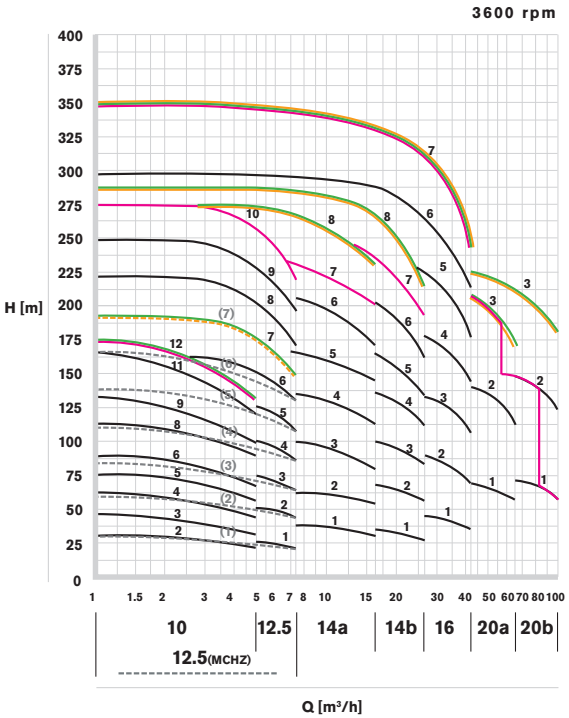

MCV - MCH - MCHZ

Multistage pumps

Your local contact:

http://www.johnson-pump.com/JPIndustry/JohnsonPump_distributors.htm

SPX FLOW TECHNOLOGY ASSEN B.V.
Dr. A.F. Philipsweg 51, 9403 AD Assen
P.O. Box 9, 9400 AA Assen, THE NETHERLANDS
P: +31 (0)592 37 67 67
F: +31 (0)592 37 67 60
E: johnson-pump.nl@spx.com

SPX reserves the right to incorporate our latest design and material changes without notice or obligation.
Design features, materials of construction and dimensional data, as described in this bulletin, are provided for your information only and should not be relied upon unless confirmed in writing. Please contact your local sales representative for product availability in your region. For more information visit www.spx.com and www.johnson-pump.com.
The green ">" is a trademark of SPX Corporation, Inc..
ISSUED 12/2012 JP-MCV-MCH-MCHZ-EN
COPYRIGHT © 2009, 2012 SPX Corporation