Johnson Pump®

CombiTherm

Centrifugal Pump
for Thermal Oil/Hot Water Applications



SPXFLOW®

CombiTherm Circulation Pump for Thermal Oil and Hot Water Applications

The SPX FLOW CombiTherm is developed especially for thermal oil (DIN 4754) and hot water applications EN12953-6 (DIN 4752) [ratings and dimensions to EN 733 (DIN 24255)]. CombiTherm ensures uniform process temperatures while keeping damaging heat away from seal faces and bearings. CombiTherm is designed to require no external cooling when working within the given parameters. The throttle bushing, journal bearing and seal placement reduce circulation and temperature along the pump length. This greatly reduces the temperature at the seal face and bearings.

The CombiTherm is developed around the well known Combi Modular system. Our modular design provides for maximum interchangeability of components between the variants and also with other pump types of the Combi system; thereby greatly limiting the number of spare parts to be kept in stock.

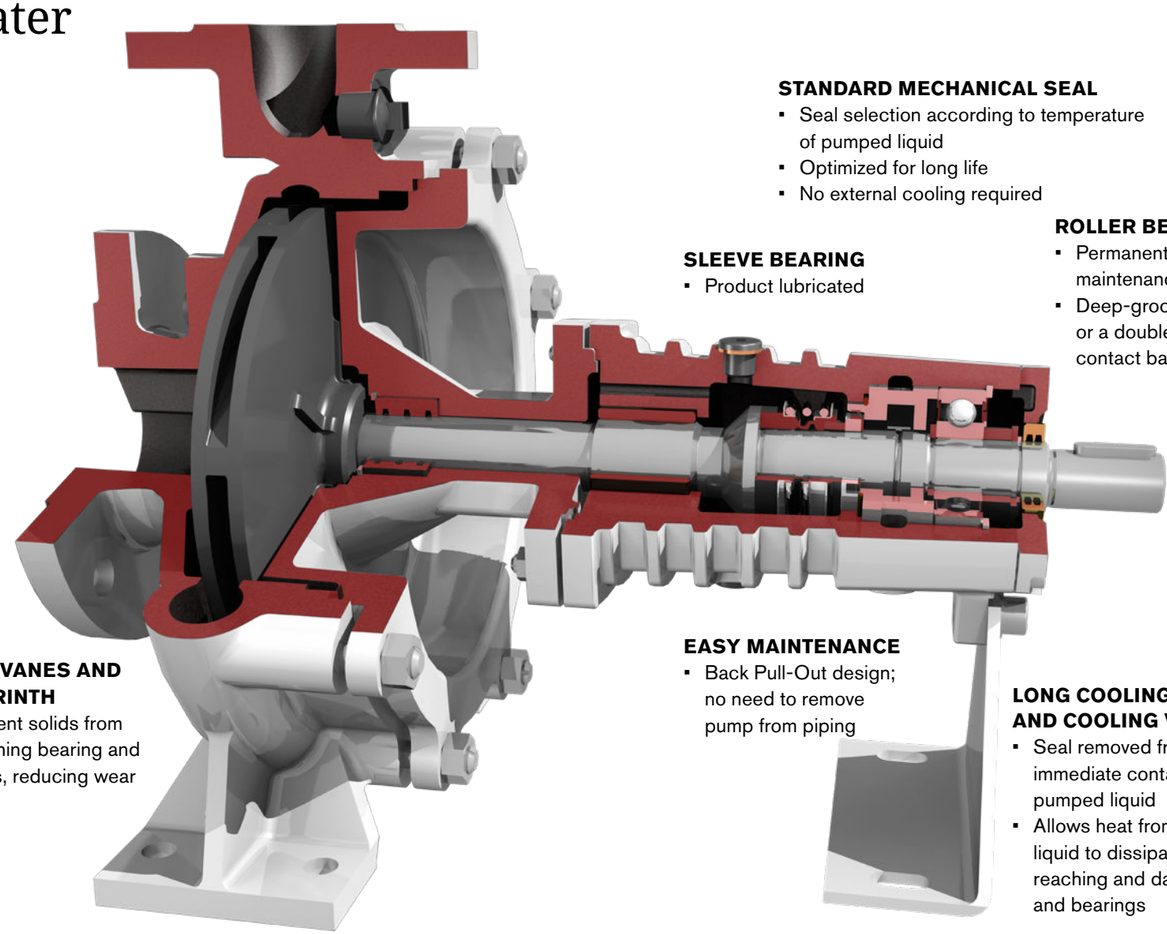

BACK VANES AND LABYRINTH
- Prevent solids from reaching bearing and seals, reducing wear

STANDARD MECHANICAL SEAL
- Seal selection according to temperature of pumped liquid
- Optimized for long life
- No external cooling required

SLEEVE BEARING
- Product lubricated

ROLLER BEARINGS
- Permanently greased, maintenance free
- Deep-groove ball-bearing or a double-row angular contact ball-bearing

EASY MAINTENANCE
- Back Pull-Out design; no need to remove pump from piping

LONG COOLING LENGTH AND COOLING VANES
- Seal removed from immediate contact with the pumped liquid
- Allows heat from the pumped liquid to dissipate before reaching and damaging seal and bearings

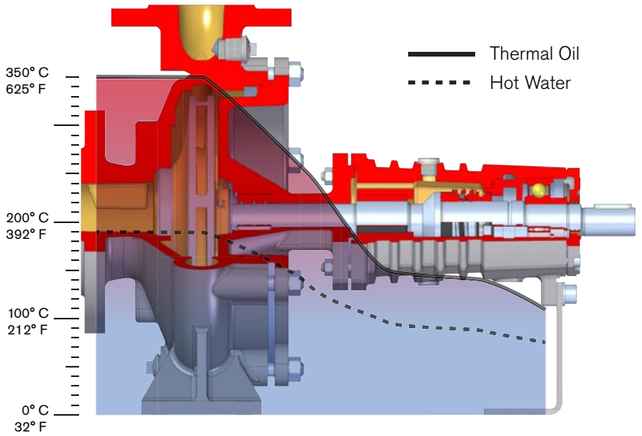

Typical temperature variations along a CombiTherm, dropping from a maximum of 662°F at the impeller to a manageable 302-284°F at the seal chamber and 230°F at the bearings.

MATERIALS
- Ductile iron in the pump casing and mechanical seal cover
- 17% hardened chrome steel shaft for increased strength and durability

Technical data

MAXIMUM CAPACITY	1761 GPM (400 m³/h) [60 Hz] 1541 GPM (350 m³/h) [50 Hz]
MAXIMUM DELIVERY HEAD	525 ft (160 m) [60 Hz] 361 ft (110 m) [50 Hz]
MAXIMUM LIQUID TEMPERATURE	Thermal oil 662°F (350°C) Hot water 374°F (190°C)
MAXIMUM OPERATING PRESSURE	232 psi (16 bar)
MAXIMUM SPEED	3600 rpm

TYPICAL PRODUCT APPLICATIONS

THERMAL OIL HEAT TRANSFER

OEM systems, maintaining temperature in jacketed equipment



MARINE AND FLOATING PRODUCTION SYSTEMS

Fuel tank heaters and fuel preheating, cargo and product heating, steam generation



FOOD

Ovens, fish frying, distillation of fatty acids and glycerine, fat softening, potato chips, milk powder plants



BITUMEN

Asphalt production, roads and roofing



RUBBER AND PLASTICS

Injection molding, PVC tape, manmade fibers

CHEMICAL

Agitators, reactors, drying plants, polymerisation, plastics



PAPER AND WOOD

Calender rolls, cardboard, washing machines, driers, floor board and wood panel

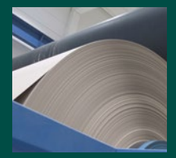

HIGH TEMPERATURE HOT WATER CIRCULATION

Hospitals, heating systems



Johnson Pump®

DIMENSIONS

CAD dimensional drawings available on request.

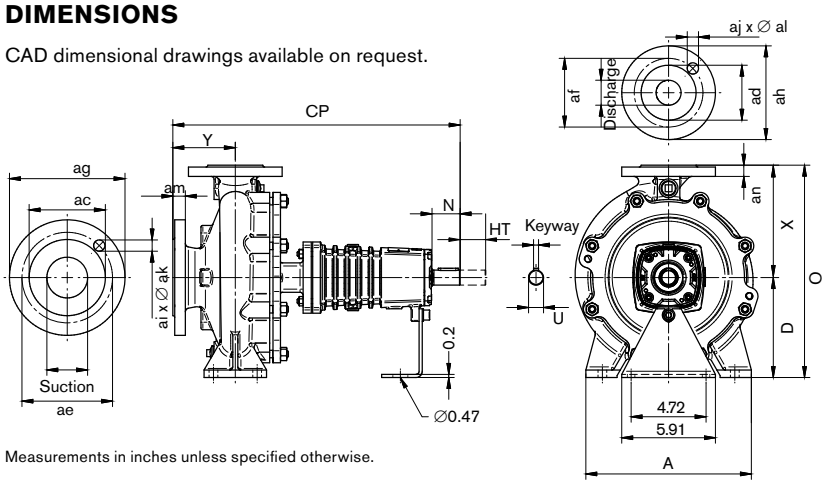

Measurements in inches unless specified otherwise.

MATERIALS

Pump casing	Ductile iron
Impeller, wear ring	Cast iron or 316 SS
Mechanical seal cover	Ductile iron
Pump shaft	17% Chrome steel
Mechanical seal material	Carbon/CrMo-Steel or Carbon/SiC

CT	Suction	Discharge	D	N	Keyway	U	HT	CP	A	Y	O	X	[lbs]
32(C)-160	1.97	1.26	5.20	1.8	0.31	0.94	3.9	17.3	9.4	3.1	11.50	6.30	77.2
32(C)-200	1.97	1.26	6.30	1.8	0.31	0.94	3.9	17.3	9.4	3.1	13.39	7.09	88.2
32-250	1.97	1.26	7.09	1.8	0.31	0.94	3.9	18.1	12.6	3.9	15.94	8.86	134.5
40C-160	2.56	1.57	5.20	1.8	0.31	0.94	3.9	17.3	9.4	3.1	11.50	6.30	81.6
40C-200	2.56	1.57	6.30	1.8	0.31	0.94	3.9	18.1	10.4	3.9	13.39	7.09	97.0
40-250	2.56	1.57	7.09	1.8	0.31	0.94	3.9	18.1	12.6	3.9	15.94	8.86	116.8
50C-160	2.56	1.97	6.30	1.8	0.31	0.94	3.9	18.1	10.4	3.9	13.39	7.09	88.2
50C-200	2.56	1.97	6.30	1.8	0.31	0.94	3.9	18.1	10.4	3.9	14.17	7.87	99.2
50C-250	2.56	1.97	7.09	1.8	0.31	0.94	3.9	18.1	12.6	3.9	15.94	8.86	123.5
65C-160	3.15	2.56	6.30	1.8	0.31	0.94	3.9	18.1	11.0	3.9	14.17	7.87	99.2
65C-200	3.15	2.56	7.09	1.8	0.31	0.94	5.5	18.1	12.6	3.9	15.94	8.86	114.6
65A-250	3.15	2.56	7.87	3.0	0.39	1.26	5.5	22.4	14.2	3.9	17.72	9.84	176.4
80C-160	3.94	3.15	7.09	1.8	0.31	0.94	5.5	19.1	12.6	4.9	15.94	8.86	116.8
80C-200	3.94	3.15	7.09	3.0	0.39	1.26	5.5	23.4	13.6	4.9	16.93	9.84	158.7
80C-250	3.94	3.15	7.87	3.0	0.39	1.26	5.5	23.4	15.7	4.9	18.90	11.02	189.6
100-160	4.92	3.94	7.87	3.0	0.39	1.26	3.9	23.4	14.2	4.9	20.28	12.40	194.0
100C-200	4.92	3.94	7.87	3.0	0.39	1.26	5.5	23.4	14.2	4.9	18.90	11.02	218.3
100C-250	4.92	3.94	8.86	3.0	0.39	1.26	5.5	24.0	15.7	5.5	19.88	11.02	213.8
125-250	5.91	4.92	9.84	3.0	0.39	1.26	5.5	24.0	15.7	5.5	23.82	13.98	271.2

Flanges according to ISO 7005 PN16/ASME B16.5 150 lbs drilled (ANSI 150lbs)

Suction	Discharge	ac	ad	ae	af	ag	ah	ai x ak	aj x al	am	an
1.97	1.26	3.62	2.50	4.75	3.50	6.50	5.51	4 x ¾	4 x ⅝	0.79	0.71
2.56	1.57	4.12	2.88	5.50	3.88	7.28	5.91	4 x ¾	4 x ⅝	0.79	0.71
2.56	1.97	4.12	3.62	5.50	4.75	7.28	6.50	4 x ¾	4 x ¾	0.79	0.79
3.15	2.56	5.00	4.12	6.00	5.50	7.87	7.28	4 x ¾	4 x ¾	0.87	0.79
3.94	3.15	6.19	5.00	7.50	6.00	8.66	7.87	8 x ¾	4 x ¾	0.87	0.87
4.92	3.94	7.31	6.19	8.50	7.50	9.84	8.66	8 x ⅞	8 x ¾	0.94	0.87
5.91	4.92	8.50	7.31	9.50	8.50	11.22	9.84	8 x ⅞	8 x ¾	0.94	0.94

Flanges according to ISO 7005 PN16 ~= EN1092-2 available in Europe, the Middle East, Africa and Asia

SPXFLOW®

SPX FLOW, Inc. reserves the right to incorporate our latest design and material changes without notice or obligation. Design features, materials of construction and dimensional data, as described in this bulletin, are provided for your information only and should not be relied upon unless confirmed in writing. Please contact your local sales representative for product availability in your region. The green "›" is a trademark of SPX FLOW, Inc.

For more information, visit www.spxflow.com/johnson-pump.

©2026 SPX FLOW, Inc.
JP_CombiTherm_BRO_US
Identification Number: JP_419_USA
Version: 01/2026