SPX®

UP TO 662°F / 350°C THERMAL OIL
UP TO 374°F / 190°C HOT WATER

CombiTherm

CENTRIFUGAL PUMP FOR THERMAL OIL / HOT WATER APPLICATIONS

SYSTEM CHARACTERISTICS

The SPX Johnson Pump CombiTherm is developed especially for thermal oil (DIN 4754) and hot water applications EN 12953-6 (DIN 4752) (ratings and dimensions to EN 733 (DIN 24255)). CombiTherm ensures uniform process temperatures while keeping damaging heat away from seal faces and bearings. CombiTherm is designed to require no external cooling when working within the given parameters. The throttle bushing, journal bearing and seal placement reduce circulation and temperature along the pump length. This greatly reduces the temperature at the seal face and bearings.

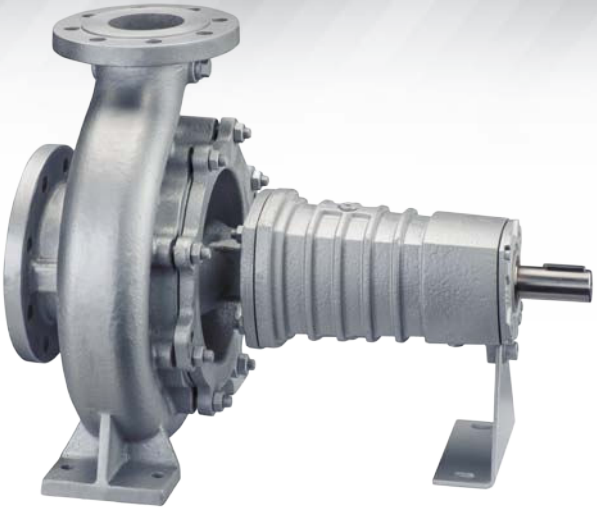

APPLICATIONS

The CombiTherm is developed especially for thermal oil and hot water applications: Thermal oil circulation and Heat transfer; Bitumen for roads and roofing; Chemical, agitators, reactors, drying plants, polymerisation; Rubber and plastics, injection moulding, PVC tape; Food, ovens, fish frying, distillation of fatty acids and glycerine, fat softening, potato chips, milk powder plants; Paper, calendar rolls, cardboard. washing machines and driers; High temperature hot water circulation, hospitals, heating systems.

PUMP SPECIFICS

- Nodular cast iron construction
- Long cooling length displacing seal away from the pumped liquid
- Back vanes and labyrinth prevent solids from reaching bearing and seals
- Product lubricated sleeve bearing
- Standard mechanical seal

TECHNICAL DATA

Maximum capacity:	1541 GPM (50 Hz) 1761 GPM (60 Hz)
Maximum delivery head:	361 ft (50 Hz) 525 ft (60 Hz)
Maximum liquid temprature:	Thermal oil 662° F, Hot water 374° F
Maximum operating pressure:	232 PSI
Maximum speed:	3600 rpm

MATERIAL	
PUMP CASING	DUCTILE IRON
IMPELLER, WEAR RING	CAST IRON OR 316 SS
MECHANICAL SEAL COVER	DUCTILE IRON
PUMP SHAFT	17% CHROME STEEL
MECHANICAL SEAL MATERIAL	CARBON/CrMo-STEEL OR CARBON/SiC

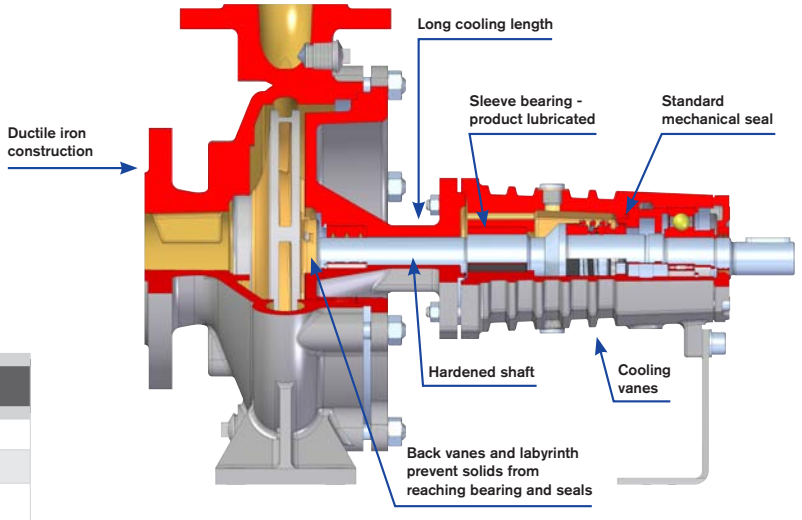

Johnson Pump®

PERFORMANCE DATA

3600 rpm

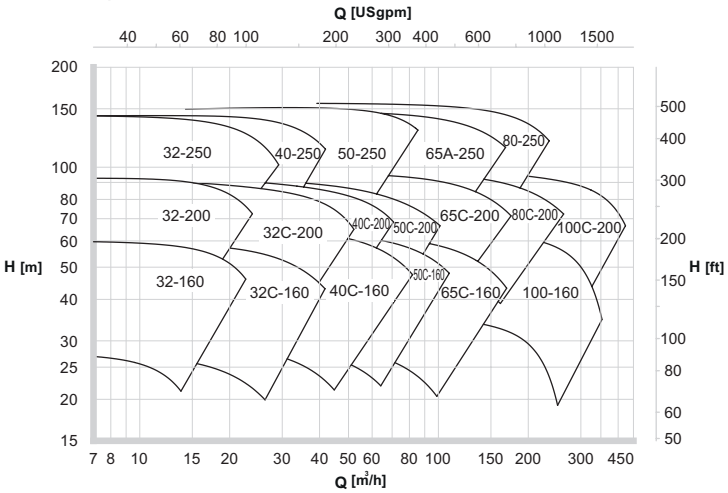

1800 rpm

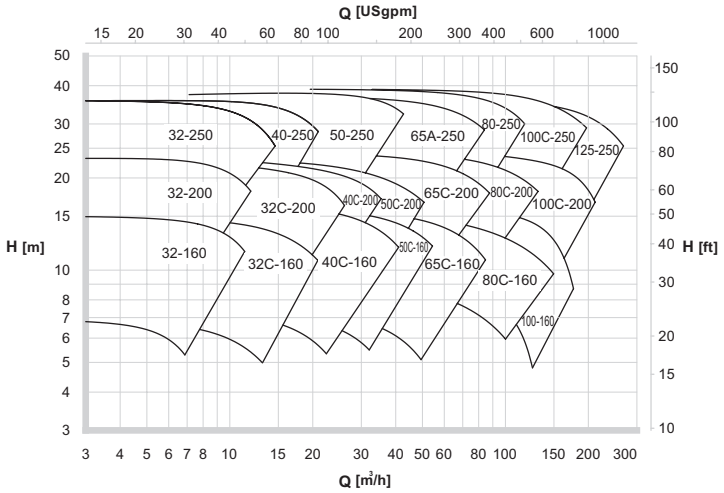

DIMENSIONS

CAD dimensional drawings available on request.

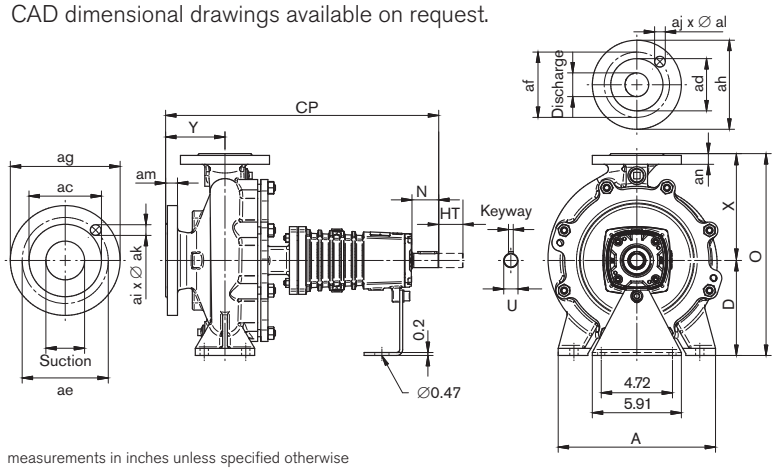

measurements in inches unless specified otherwise

FLANGES ACCORDING TO ISO 7005 PN16/ ASME B16.5 150 LBS DRILLED (ANSI 150LBS)

Suction	Discharge	ac	ad	ae	af	ag	ah	ai x ak	aj x al	am	an
1.97	1.26	3.62	2.50	4.75	3.50	6.50	5.51	4 X ¾	4 X ⅝	0.79	0.71
2.56	1.57	4.12	2.88	5.50	3.88	7.28	5.91	4 X ¾	4 X ⅝	0.79	0.71
2.56	1.97	4.12	3.62	5.50	4.75	7.28	6.50	4 X ¾	4 X ¾	0.79	0.79
3.15	2.56	5.00	4.12	6.00	5.50	7.87	7.28	4 X ¾	4 X ¾	0.87	0.79
3.94	3.15	6.19	5.00	7.50	6.00	8.66	7.87	8 X ¾	4 X ¾	0.87	0.87
4.92	3.94	7.31	6.19	8.50	7.50	9.84	8.66	8 X ⅞	8 X ¾	0.94	0.87
5.91	4.92	8.50	7.31	9.50	8.50	11.22	9.84	8 X ⅞	8 X ¾	0.94	0.94

Flanges according to ISO 7005 PN16 ≅ EN1092-2 available in Europe, the Middle East, Africa and Asia

CT	Suction	Discharge	D	N	Keyway	U	HT	CP	A	Y	O	X	[LBS]
32(C)-160	1.97	1.26	5.20	1.8	0.31	0.94	3.9	17.3	9.4	3.1	11.50	6.30	77.2
32(C)-200	1.97	1.26	6.30	1.8	0.31	0.94	3.9	17.3	9.4	3.1	13.39	7.09	88.2
32-250	1.97	1.26	7.09	1.8	0.31	0.94	3.9	18.1	12.6	3.9	15.94	8.86	134.5
40C-160	2.56	1.57	5.20	1.8	0.31	0.94	3.9	17.3	9.4	3.1	11.50	6.30	81.6
40C-200	2.56	1.57	6.30	1.8	0.31	0.94	3.9	18.1	10.4	3.9	13.39	7.09	97.0
40-250	2.56	1.57	7.09	1.8	0.31	0.94	3.9	18.1	12.6	3.9	15.94	8.86	116.8
50C-160	2.56	1.97	6.30	1.8	0.31	0.94	3.9	18.1	10.4	3.9	13.39	7.09	88.2
50C-200	2.56	1.97	6.30	1.8	0.31	0.94	3.9	18.1	10.4	3.9	14.17	7.87	99.2
50C-250	2.56	1.97	7.09	1.8	0.31	0.94	3.9	18.1	12.6	3.9	15.94	8.86	123.5
65C-160	3.15	2.56	6.30	1.8	0.31	0.94	3.9	18.1	11.0	3.9	14.17	7.87	99.2
65C-200	3.15	2.56	7.09	1.8	0.31	0.94	5.5	18.1	12.6	3.9	15.94	8.86	114.6
65A-250	3.15	2.56	7.87	3.0	0.39	1.26	5.5	22.4	14.2	3.9	17.72	9.84	176.4
80C-160	3.94	3.15	7.09	1.8	0.31	0.94	5.5	19.1	12.6	4.9	15.94	8.86	116.8
80C-200	3.94	3.15	7.09	3.0	0.39	1.26	5.5	23.4	13.6	4.9	16.93	9.84	158.7
80C-250	3.94	3.15	7.87	3.0	0.39	1.26	5.5	23.4	15.7	4.9	18.90	11.02	189.6
100-160	4.92	3.94	7.87	3.0	0.39	1.26	3.9	23.4	14.2	4.9	20.28	12.40	194.0
100C-200	4.92	3.94	7.87	3.0	0.39	1.26	5.5	23.4	14.2	4.9	18.90	11.02	218.3
100C-250	4.92	3.94	8.86	3.0	0.39	1.26	5.5	24.0	15.7	5.5	19.88	11.02	213.8
125-250	5.91	4.92	9.84	3.0	0.39	1.26	5.5	24.0	15.7	5.5	23.82	13.98	271.2

SPX FLOW TECHNOLOGY ASSEN B.V.

Dr. A.F. Philipsweg 51, 9403 AD Assen P.O. Box 9, 9400 AA Assen, THE NETHERLANDS

P: +31 (0)592 37 67 67 F: +31 (0)592 37 67 60 E: johnson-pump.nl.support@spx.com

For more information about our worldwide locations, approvals, certifications, and local representatives, please visit www.spx.com and www.johnson-pump.com.

SPX Corporation reserves the right to incorporate our latest design and material changes without notice or obligation. Design features, materials of construction and dimensional data, as described in this bulletin, are provided for your information only and should not be relied upon unless confirmed in writing.

JP_419DS_GB Version: 02/2014 Issued: 07/2014

COPYRIGHT © 2014 SPX Corporation