Johnson Pump®

CombiPro

Heavy Duty Process Pump
According to API 610, API 682, API 685

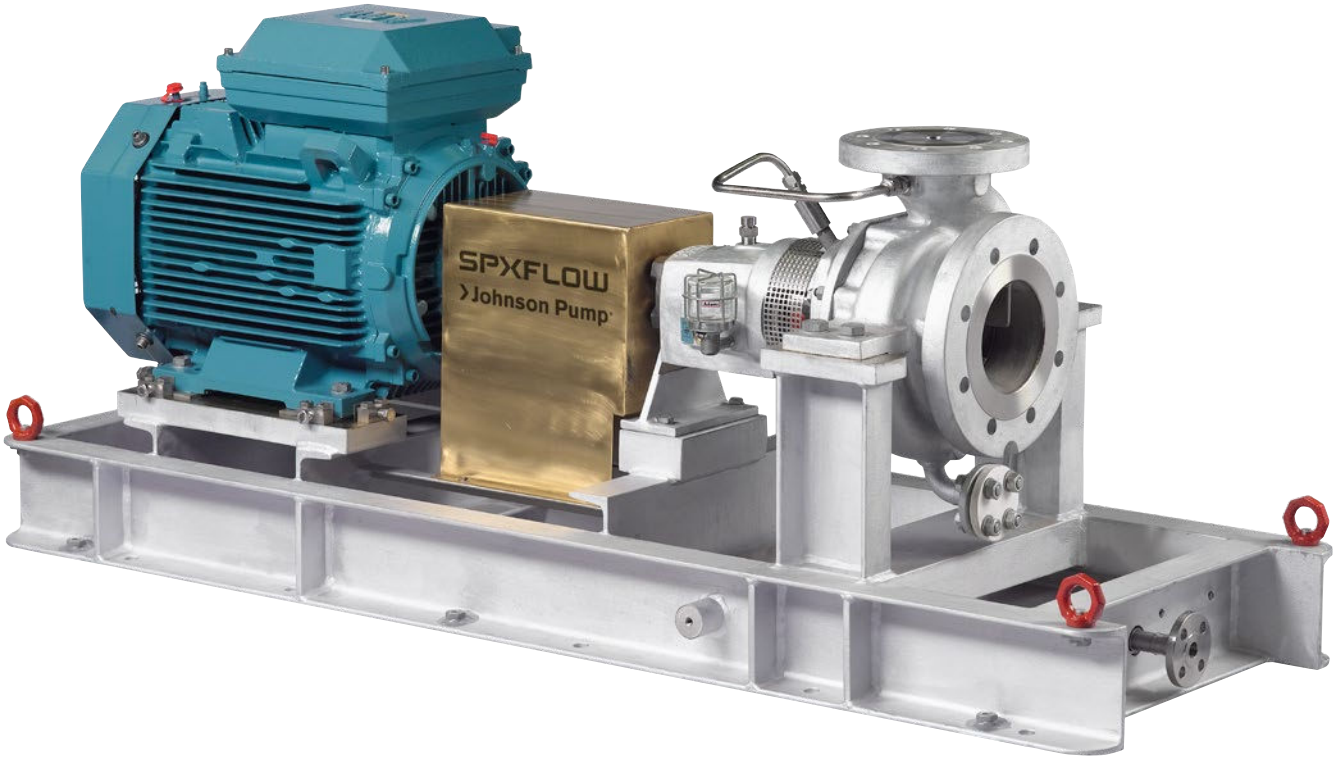

SPXFLOW®

THE RELIABLE PRO

CombiPro is a series of horizontal centreline supported centrifugal pumps.

The design of CombiPro is based on the American Petroleum Institute standard “Centrifugal Pumps For General Refinery Services”, also known as API 610.

Satisfying this standard, the CombiPro meets the high level performance requested by refineries and petrochemical industries.

The CombiPro is part of the CombiSystem, a modular concept of single stage end-top centrifugal pump families, all sharing the same basic hydraulic design with a high degree of interchangeability between parts and sub-assemblies.

A number of standards were taken into account in the designing of this pump series: EN 733 (DIN 24255), EN 22858 (ISO 2858 / DIN 24256), ISO 5199 and API 610.

The seal chamber is designed to fit all types of seals, especially API 682 cartridge seals. The multifunctional pump cover and the integrated design of pump, base plate and accessories enable the use of standard constructions for all API 682 seal plans.

For seal less applications, the CombiPro can be equipped with a magnetic coupling in accordance with API 685.

Each CombiPro pump is mounted on a sturdy welded steel base plate with reinforced pedestals and bracket support, conforming to API 610. This reliable rigid construction extends the duty life of bearings and seal and enables trouble-free operation under severe process conditions.

CombiPros are available as API 610 OH2, OH3, OH5 and VS4 compliant variants.



Test bed SPX Flow Technology in Assen, the Netherlands

CombiPro Typical Characteristics



- Designed according to the latest requirements of API 610
- Suitable for all common API 682 cartridge seal makes
- Seal less design option in accordance with API 685
- Fully integrated design of pump, motor, base plate and accessories
- All pumps come with specially designed rigid base plates in accordance with API 610
- Computer aided design of geometry of all hydraulic parts
- Outstanding hydraulic performance, verified by actual test results
- Most suitable centreline mounted, end-suction pump for chemicals and hydrocarbon duties

Technical data

MAXIMUM CAPACITY	92,460 GPH (350 m^3/h)
MAXIMUM HEAD	525 ft (160 m)
MAXIMUM WORKING PRESSURE	508 psi (35 bar)
MAXIMUM TEMPERATURE	-22°F to +662°F (-30°C to +350°C)
MAXIMUM VISCOSITY	300 MPa /cP
MAXIMUM SPEED	3600 rpm

TYPICAL PRODUCT APPLICATIONS

Trouble-free operation under every process condition

PROCESS INDUSTRY

The CombiPro is the SPX FLOW Johnson Pump process pump for refineries and (petro) chemical industries. Its sturdy construction, its specially designed 'tailormade' base plate and its versatility to fit a great number of seals or magnetic coupling enable trouble-free operation under every process condition, resulting in long Mean Time Between Failure and low cost of ownership.







CombiPro Features and Benefits

HYDRAULIC PERFORMANCE
- Implementation of the latest
- Hydraulic research results
- Improved NPSH
- Excellent over-all hydraulic performance

SHAFT SEALING
- Standardised seal chamber design to fit all recognised API 682 seal configurations
- Welded and flanged seal plan connections
- Seal less design with magnetic coupling
- All standardised seal chamber designs available as full cartridge seal

FLANGES
- According to ANSI B16.5, 300 lbs RF, 150 lbs RF
- Stock finish, smooth finish

PUMP CASING
- Centreline supported
- End suction type
- Available with integrated cooling or heating chamber
- Welded and flanged drain connection

TWO IMPELLER TYPES
- Closed impeller
- Half open
- Dynamically balanced
- Clearances according to API 610
- Suitable for liquids with solids
- Easy to clean when pumping sticky liquids
- Fully interchangeable

IMPELLER CAP NUT
- Positively locked with stainless steel set screw
- In accordance with API 610

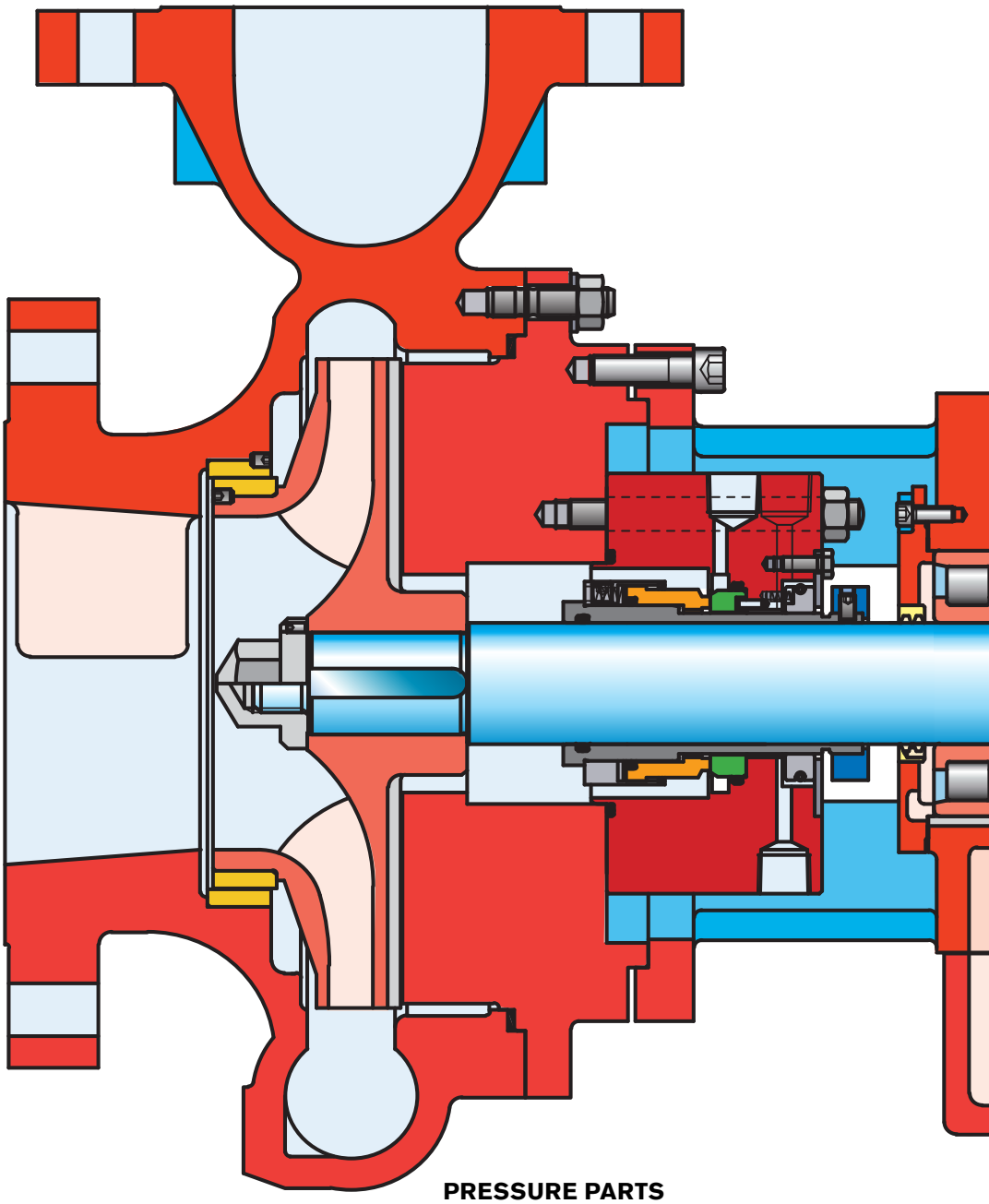

WEAR RINGS
- One in pump casing, one on impeller
- Secured against co-rotation by means of stainless steel set screws
- Replaceable
- Extending pump life

PRESSURE PARTS
- Designed with a corrosion allowance of at least 3 mm
- Guaranteeing an adequate duty life for every application

BASE PLATE

- All CombiPro pumps are assembled as complete units on a sturdy API 610 designed base plate
- Integrated welded and fabricated drain pan design with flanged drain connection, in stainless steel optional
- Strong modular concept of the design enables the optimum base plate configuration for each pump/ motor combination to be selected by computer and assembled from standardised components

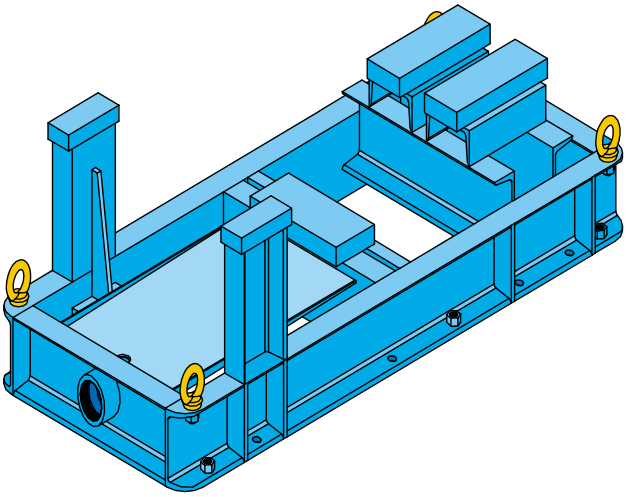

CASING GASKET

- Spiral wound
- Metal to metal fit
- Burst proof
- Cannot be overrstretched

BEARING BRACKET

- Robust design
- Optional oil-cooling cover
- Large openings
- Dimpled locations for accurate vibration measurements
- Longer bearing life
- Maintaining optimum service temperature of the lube oil
- Excellent accessibility of the seal environment

BEARING

- Oil lubricated bearing construction
- Roller bearing at pump end
- Double row angular contact ball bearing at drive end
- Providing bearing life of over 25,000 hours
- Retaining radial forces
- Providing axial thrust

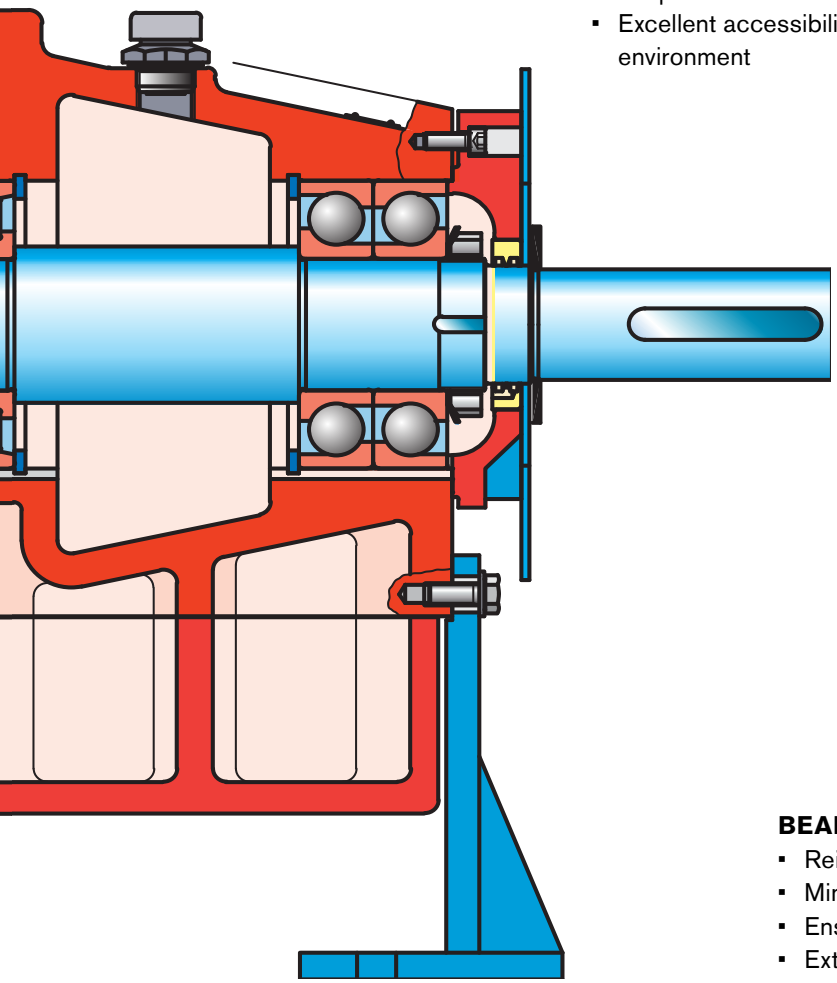

COUPLING GUARD

- Non-sparking design
- Meets all safety requirements for rotating equipment
- All rotating parts between bearing bracket and motor are fully protected

PUMP SHAFT

- Robust design
- Minimal shaft deflection
- Deflection less than 0.002 in (0.05 mm) at the seal face
- Extending duty life of seal and bearings

BEARING BRACKET SUPPORT

- Reinforced construction
- Minimised shaft misalignment
- Ensures optimal rigidity of the entire pump construction
- Extending duty life of seal and bearings

Impellers

The CombiPro is provided with 2 different types of impellers:



Closed Impeller

Provided with back vanes to ensure a good circulation of flushing liquid and to minimise the risk of pollution of the shaft sealing environment. Renewable wear ring at suction side. Clearances between impeller and pump casing in accordance with API.

Half-Open Impeller

Consisting of a shaped front wear plate mounted in the pump casing and a front plateless impeller running against the wear plate with narrow clearance. Easy to clean if the pumped liquid sticks to the internal of the impeller.

Shaft Sealing

- Standardised design to fit all recognised API 682 seal configurations:
  – single seal construction
  – dual seal construction (unpressurised and pressurised)
- In all common API conform constructions:
  – pusher type
  – with bellows
  – with bellows, high temperature (>392 °F / 200 °C)
- All of them available as full cartridge seals in a large variety of materials, including optional heated seal chambers
- Seal less design in accordance with API 685

Lubrication

- A constant level oiler with cage protected sight glass ensures optimal lubrication conditions.
- Bull's-eye sight glass with oil level indication allows permanent visual control of oil level and condition.
- Breather with micro-filter equalizes pressure differences inside the bearing bracket, but prevents water from entering into the bearing bracket.
- Provisions are made to mount an optional cooling chamber to the bearing bracket to maintain the optimum service temperature of the lubricating oil.

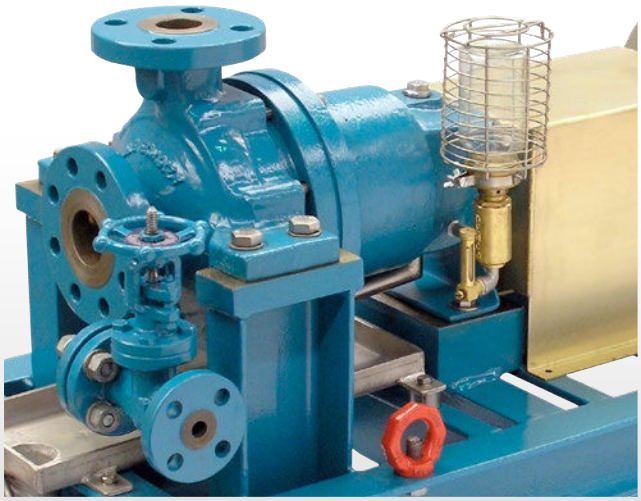

API Material Combinations

S-1 Carbon steel with cast iron impeller

S-6 Carbon steel with 12% chrome impeller

S-8 Carbon steel with stainless steel 316 impeller

C-6 12% Chrome with 12% chrome impeller

A-8 Stainless steel 316 with stainless steel 316 impeller

D-1 22% Duplex with 22% duplex impeller

D-2 25% Super duplex with 25% super duplex impeller

Other material combinations, for example Titanium, as specified by customer demand.

Hydraulic Performance Data

n =1500 rpm

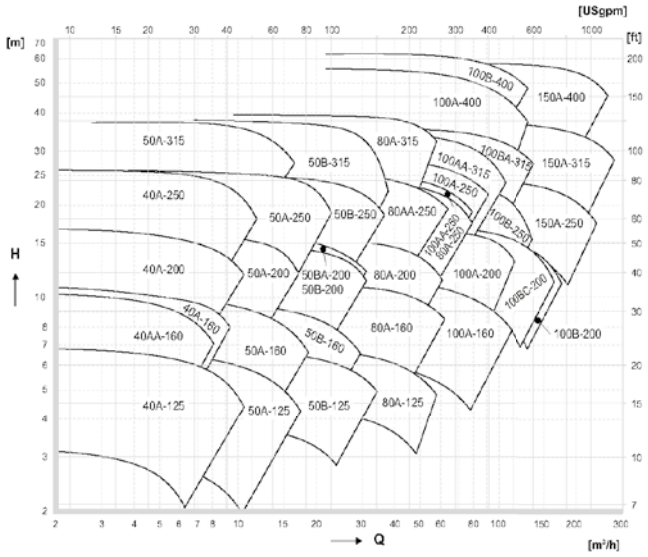

n =3000 rpm

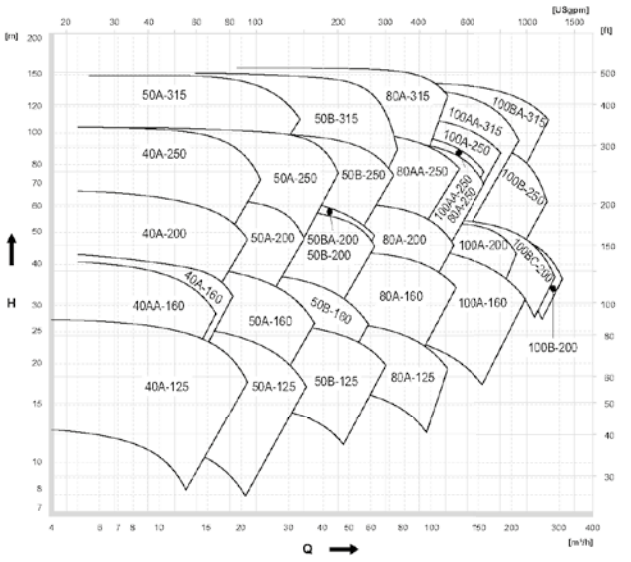

n =1800 rpm

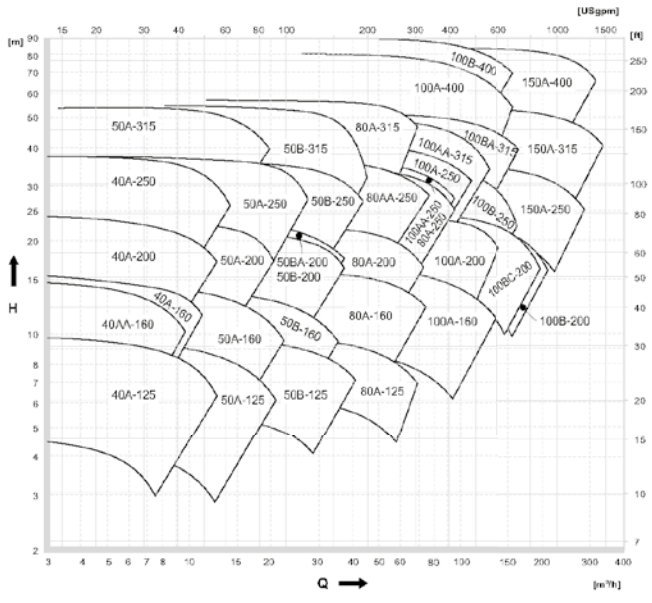

n = 3600 rpm

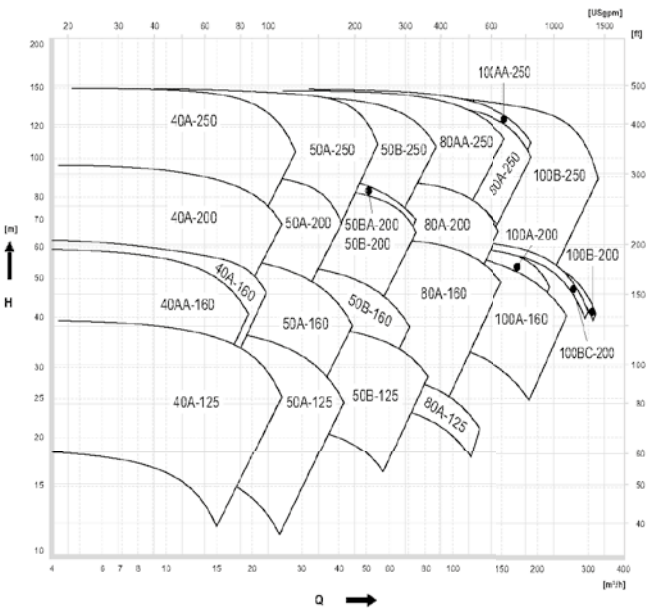

Subject to alterations

Johnson Pump®

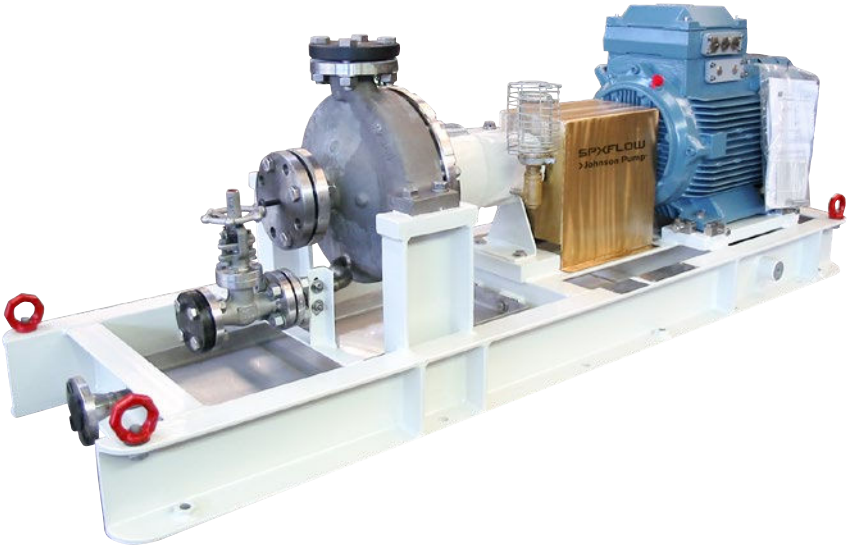

CombiPro mag drive
API 685



CombiProLine
API 610 OH3



CombiProSump
API 610 VS4

SPXFLOW®

SPX FLOW, Inc. reserves the right to incorporate our latest design and material changes without notice or obligation. Design features, materials of construction and dimensional data, as described in this bulletin, are provided for your information only and should not be relied upon unless confirmed in writing. Please contact your local sales representative for product availability in your region. The green "›" is a trademark of SPX FLOW, Inc.

For more information, visit www.spxflow.com/johnson-pump.

©2026 SPX FLOW, Inc.
JP_CombiPro_BRO_GB

Version: 01/2026