IMP PUMPS d.o.o.
Pod hrasti 28, 1218 Komenda, SI
info@imp-pumps.com
+386 1 28 06 400

General data	
Title	NMT MINI PLUS 32/100-180
Code	979527785
EAN13	3831124606031
Technical data	
Flow max	5,6 m³/h
Head max	10,1 m
Port-to-port length	180 mm
Pipe connection	DN 32
Ambient temp. range	0 ÷ 40 °C
Medium temp.	-10 ÷ 110 °C
Pressure rating of the pipe connection	PN10
Electrical data	
Supply voltage	1~230 V
Mains frequency	50/60 Hz
Connection power	90 W
Max revolutions	6200 RPM
Current max	0,7 A
Materials and installation	
Seal type	/
Bearing	carbon
Impeller	Noryl Fe 1630PW
Hydraulics	Cast iron
Shaft	AISI 420
Pipeline material	0
Net weight	1.93 kg

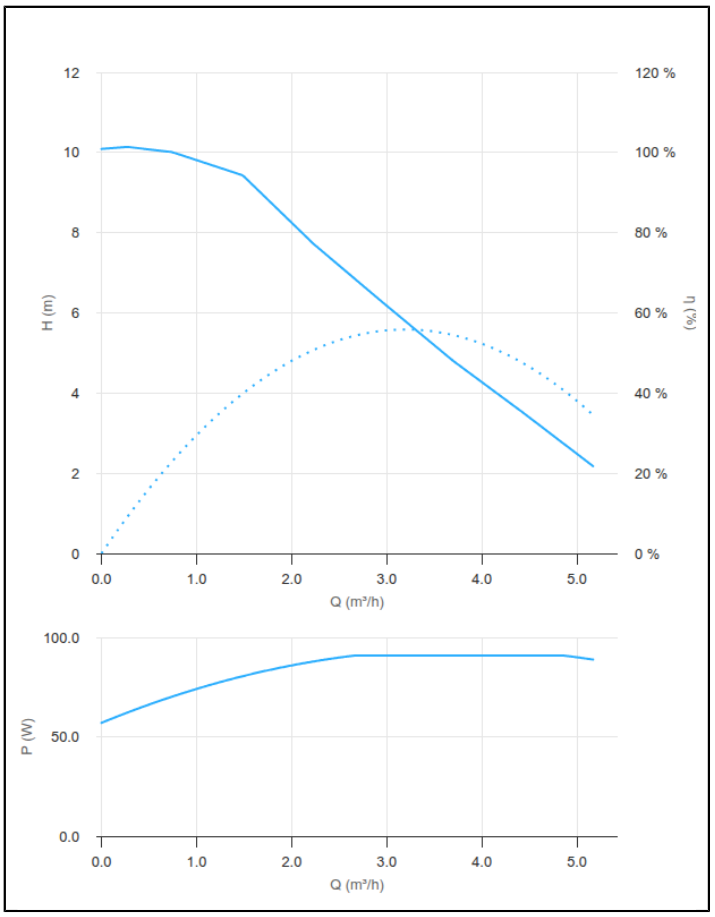



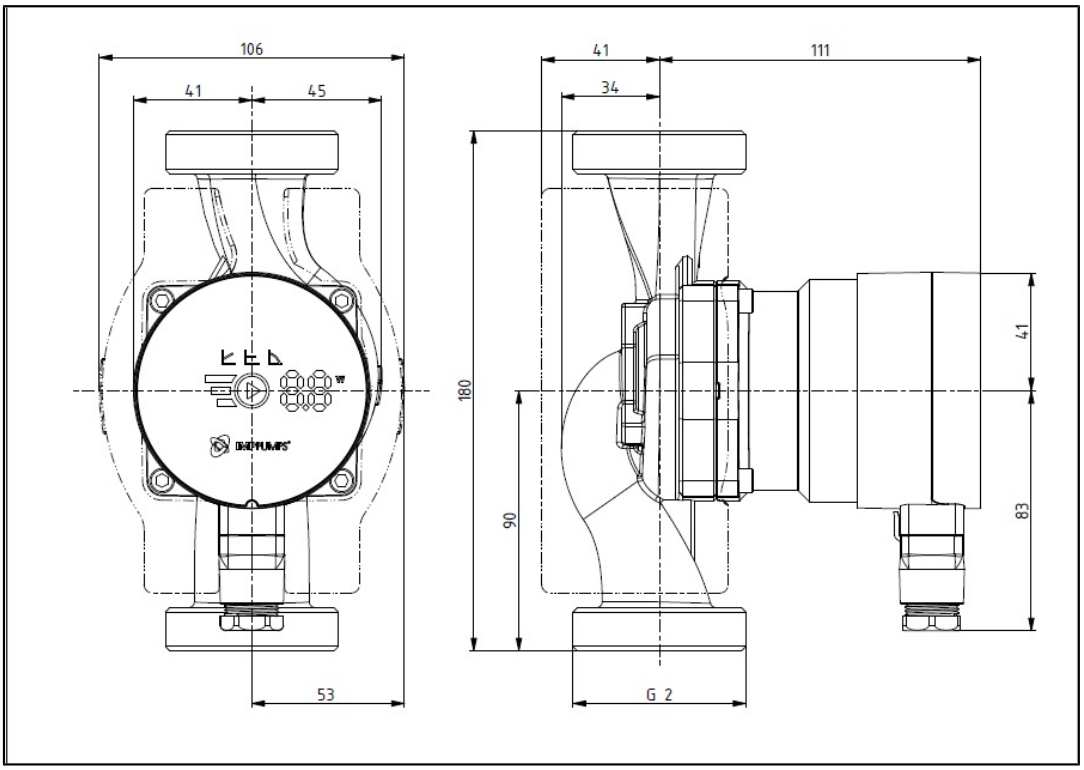

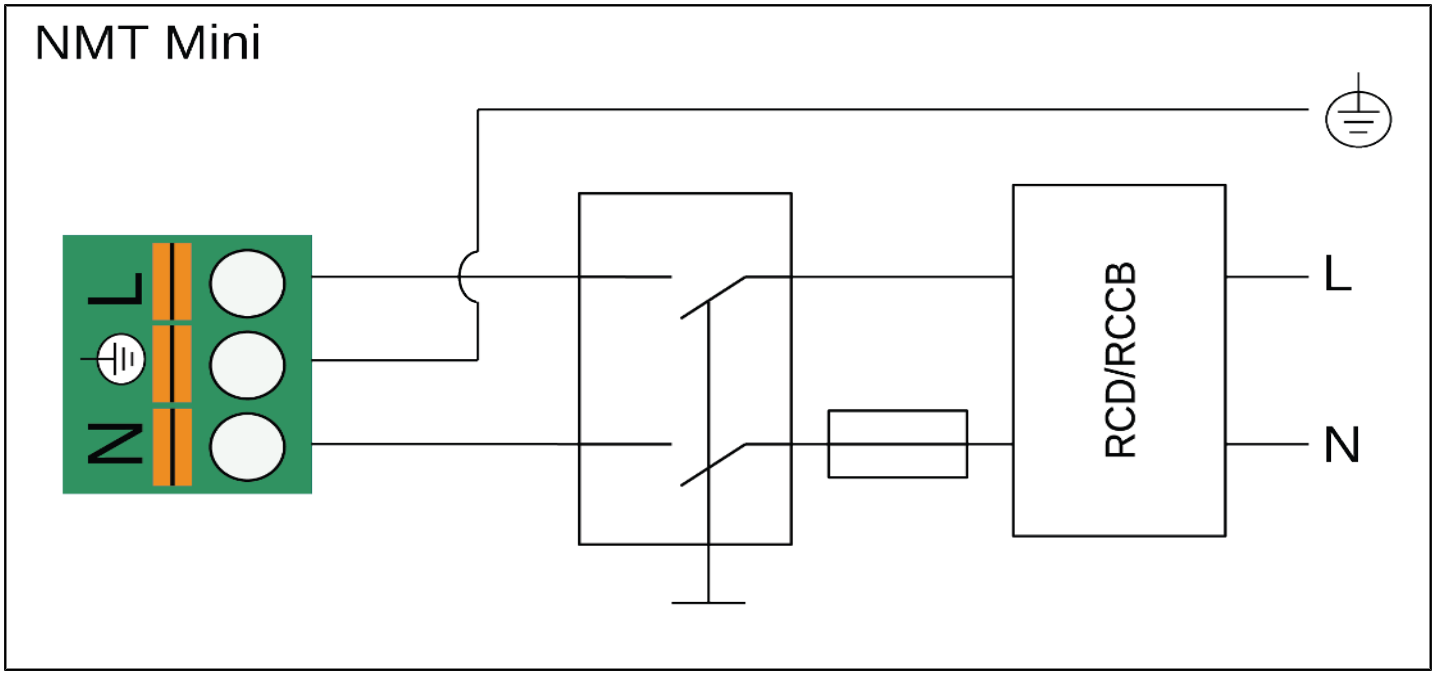
NMT Mini
L
N
RCD/RCCB
L
N