xylem
Let's Solve Water



Flygt N-technology pump series for water and wastewater

HIGH EFFICIENCY WITH CLOG-FREE PERFORMANCE

50Hz

FLYGT
a xylem brand

No clogging. No wasted energy. Just trouble-free pumping

Our Flygt N-pumps (1.3 kW – 680 kW) are designed to handle the world's toughest water and wastewater applications. And with our Adaptive N® technology in all smaller pumps, you get a superior way to avoid clogging, reduce unplanned maintenance and cut your energy bills. That adds up to total peace of mind – and big savings over the long term.

Our vast fluid handling knowledge and dedication to research and development leads to technological advances and continuous improvement. That's why Flygt N-pumps are currently at work in millions of installations worldwide. Quite simply, they have proven to be the best and most reliable choice for both dry and submersible installations.

Sustained high efficiency saves money

When solid objects, such as stringy fibers and modern waste, enter the inlet of a conventional pump, they tend to get caught on the leading edges of the impeller vanes. This build-up reduces the impeller's efficiency, resulting in increased power consumption (Fig. A).

Avoiding unplanned service calls

With conventional wastewater pumps, a continued build-up of solids inside the impeller can trip the panel overload or motor protection function, causing clogging and leading to costly unplanned service calls (Fig. A). Even if the pump is running intermittently, hydraulic efficiency is reduced since the solids build-up needs to be removed by backflushing when the pump is shut off at the end of the operating cycle (Fig. B). Not until the next cycle begins is efficiency restored to its initial value when the impeller is free from solid objects.

Flygt N-technology has a mechanically self-cleaning design that handles the toughest modern wastewater challenges. With sustained high efficiency it minimizes running hours and energy costs over time (Fig. C).

Experience the power of N

Whether you are working with wastewater, stormwater or another application, you will find a broad range of N-pumps designed to take on the toughest challenges and get the job done. Robust, reliable and self-cleaning, they cut your energy bills and virtually eliminate unplanned maintenance.

Sustained high efficiency with Flygt N-pumps

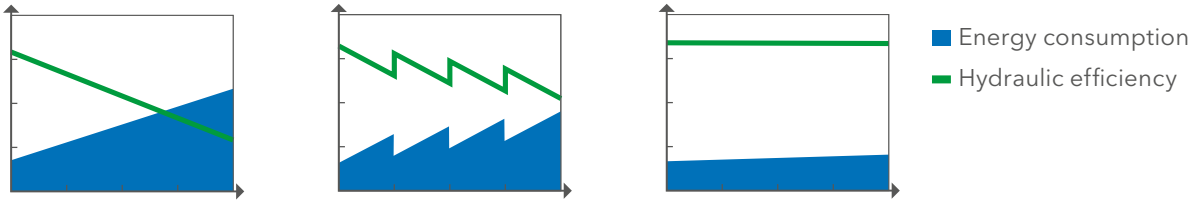

A. Conventional wastewater pump

B. Conventional pump running intermittently

C. Flygt N-pump



Broad capacity

- Ratings from 1.3 kW to 680 kW
- Discharge up to 500 mm
- Flow up to 1,760 l/s
- Heads up to 100 m
- Submersible and dry installations
- Every Flygt pump is performance tested in the factory
- Can handle dry solids up to 8%

N-pump application areas

- Wastewater
- Stormwater
- Desalination
- Reuse
- Sewage
- Treatment Plant

Key benefits

- State-of-the art pumping with Adaptive N technology
- Sustained high-efficiency operation
- Modular design with high adaptation grade
- Lowers energy and unplanned maintenance costs
- Reduces total lifecycle cost of the installation

Advanced technology guides the design of every component

From the motor and seals to the shaft and impellers, every component in a Flygt N-pump is designed, engineered and manufactured to optimize operation and prolong service life. Advanced technology guides the design of all aspects of the pump. One example is the Adaptive N hydraulic system, which is available only with lower-capacity pumps.

The fundamental N-technology, which was pioneered by Flygt, has been incorporated into our pumps for years. A more recent innovation is our Adaptive N impeller and Adaptive N hydraulic technologies which combine a unique geometry, dual-blade impeller and other patented features to give you sustained high efficiency and smooth operations.

When larger objects enter the pump, the impeller lifts up due to the forces from these solid obects passing through. This self-cleaning design results in up to 25% lower energy consumption, regardless of impeller speed or duty point. It also minimizes vibrations, resulting in a longer life span for the mechanical components.

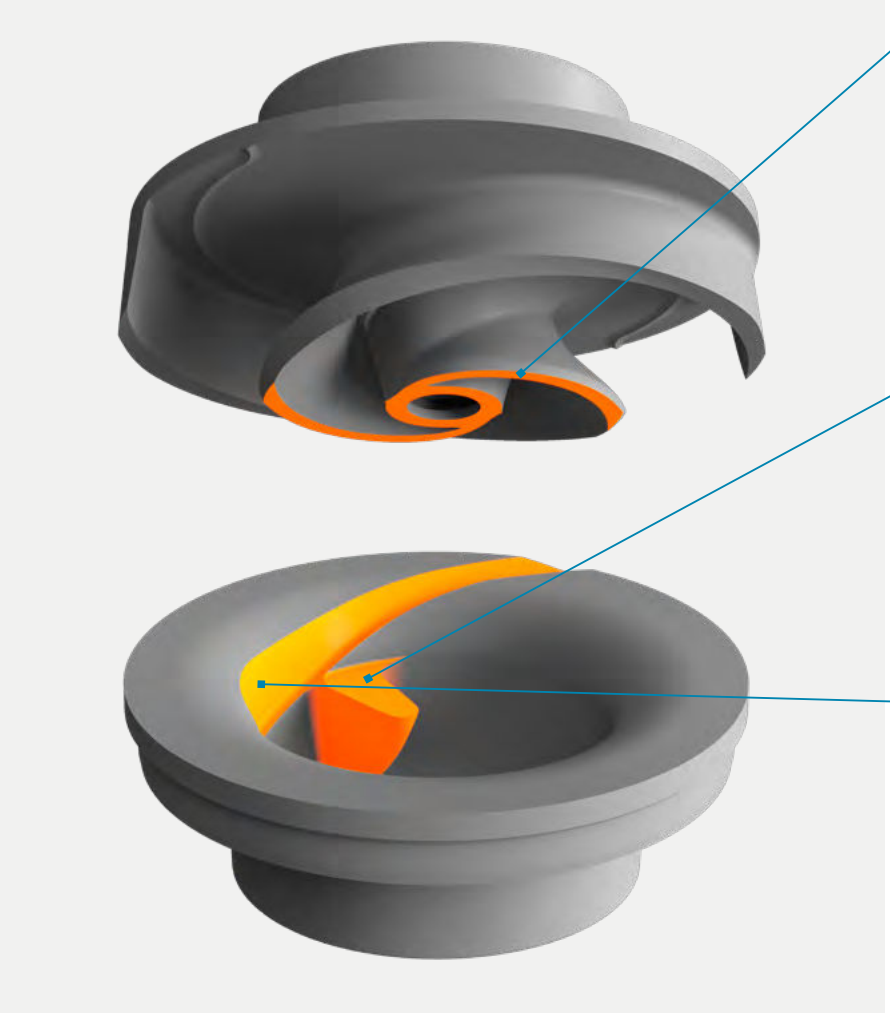

Backswept leading edges – ensures no sticking
When solids enter the pump, they are met by the N impeller. The optimized blade geometry, with its backswept leading edges, ensures that no material sticks to the impeller.

Integrated guide pin – clears the center
A guide pin inserted into the insert ring clears the center of the impeller by pushing solids along the leading edges towards the periphery of the impeller for removal.

Relief groove – facilitates transport
When solids reach the perimeter of the inlet, they are transported inside the relief groove, guided along the edge of the impeller vane, through the volute and out of the pump.

Adaptive N –
lifts up for large objects
When larger objects enter the pump, the impeller lifts up due to the forces from these solid objects passing through. This avoids clogging and ensures continuous, energy-efficient pumping.

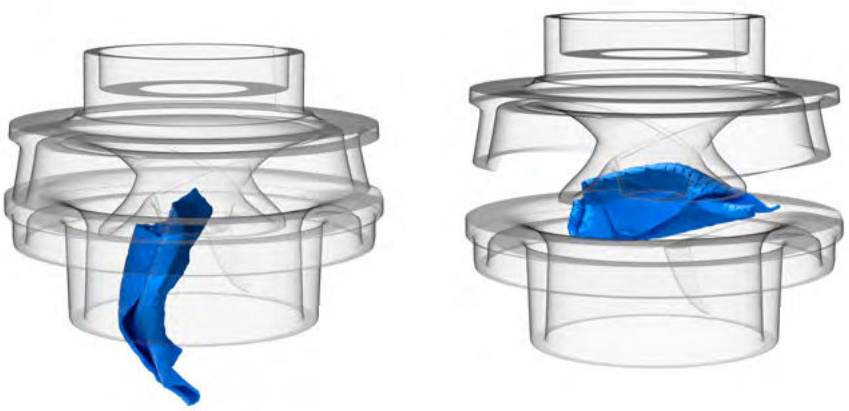

Choice of impeller materials
With our Adaptive N impeller, you can also choose the optimal material type for your needs: Hard-Iron, grey iron or stainless steel. Flygt's Hard-Iron alloy is developed specifically for tough wastewater applications. Accelerated wear tests prove that Hard-Iron (60 HRC) hydraulic components prolong the lifetime by a factor of five, compared to standard grey iron material.

Extra-durable option for abrasive and erosion corrosion applications.



Chopper ring for cutting long fibers or solids.

Adaptive N hydraulic materials - accelerated wear test

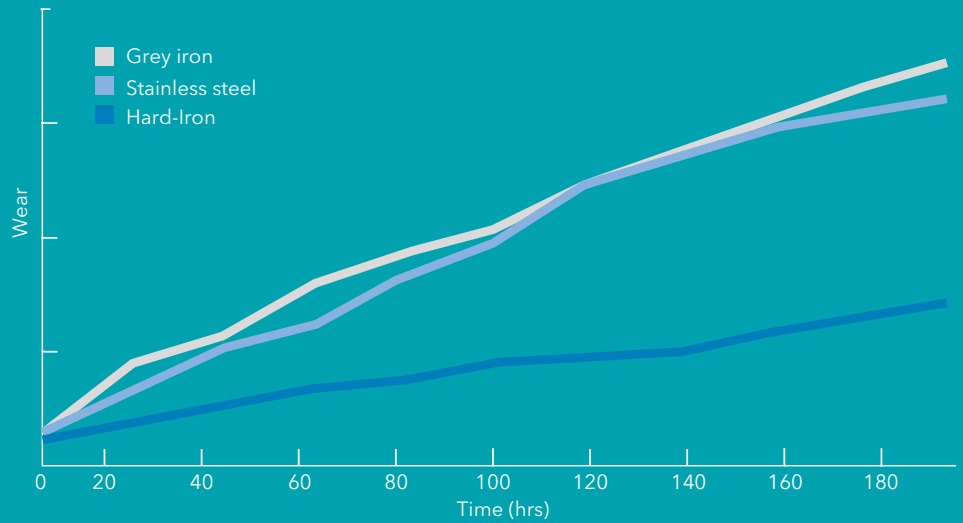

After 200 hours, the Hard-Iron impeller proved to be five times more wear resistant than the grey iron version. The stainless steel impeller showed wear comparable to the standard grey iron material.

Low-capacity pumps

This series of Flygt N-pumps includes models capable of handling capacities up to 100 l/s. Like all Flygt N-pumps, they help reduce the total lifecycle costs of your installation.

1. Better heat transfer
Our specially designed and manufactured motor provides enhanced cooling because heat losses are concentrated around the stator. Trickle impregnated (not applicable for 3069) in resin (Class H insulation), the stator windings are rated at 180°C (355°F) and enable up to 30 starts per hour.

2. Cable entry
Water-resistant cable entry provides both sealing and strain relief functions to ensure a safe installation.

3. Sensors
Thermal sensors embedded in the stator windings prevent overheating. Optional leakage sensors in the stator and oil housings are also available.

4. Long-life bearings
Durable bearings provide a minimum service life of 50,000 hours.

5. Enduring seals
The Griploc system consists of two sets of mechanical shaft seals that operate independently to provide double security against leakage.

Compliance
Each pump is tested and approved in accordance with national and international standards, including 60034-1 and CSA. Pumps are available in explosion-proof versions for use in hazardous environments, and are approved by the Factory Mutual, European Standard and IEC.

POWER RATINGS AND SIZE

Model	**3069**	**3085**	**3102**	**3127**
Power rating - kW	1.5–2.4	1.3–2.4	3.1–4.5	4.7–8.5
Discharge size - mm	50	80	80	80
	65		100	100
	80		150	150

Performance, 50 Hz

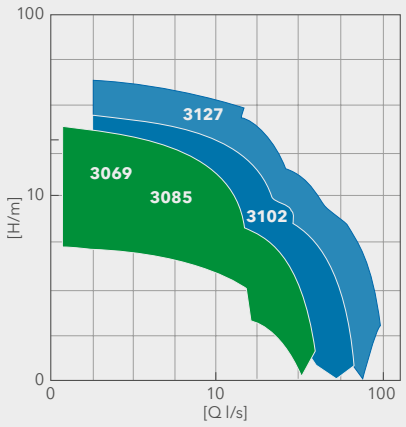



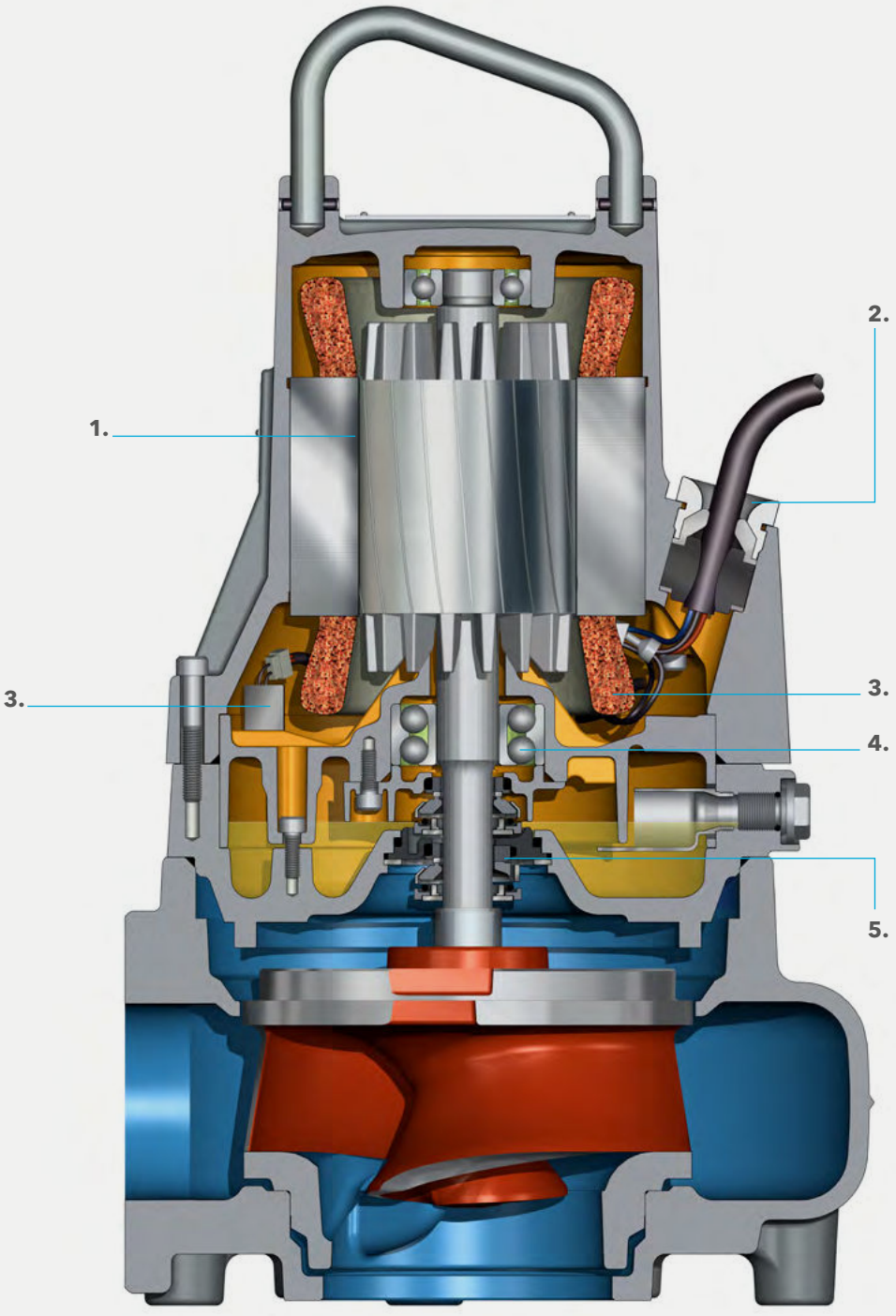
1.
2.
3.
3.
4.
5.

Medium-capacity pumps

For demanding pumping duties, medium-capacity models handle fluid transport for capacities up to 500 l/s. Robust and highly efficient, they provide clog-free performance to achieve the lowest overall lifecycle costs.

1. Better heat transfer
Our specially designed and manufactured motor provides enhanced cooling because heat losses are concentrated around the stator. Trickle impregnated in resin (Class H insulation), the stator windings are rated at 180°C (355°F) and enable up to 30 starts per hour.

2. Efficient cooling
These pumps are cooled either by the surrounding liquid or liquid/air, in more demanding applications, with an internal closed-loop cooling system.

3. Inspection chamber
To increase operational reliability, an inspection chamber between the seal unit and the bearings enables rapid spot checks and maintenance. In the case of a seal failure, a built-in sensor provides an early warning of any fluid build-up, thus reducing the risk of expensive repair work.

4. Cable entry
Water-resistant cable entry provides both sealing and strain relief functions to ensure a safe installation.

5. Sensors
Thermal sensors embedded in the stator windings prevent overheating, and a leakage sensor in the inspection chamber minimizes the risk of bearing and stator failure.

6. Long-life bearings
Durable bearings provide a minimum service life of 50,000 hours.

7. Enduring seals
The Flygt Plug-in seal with the Active Seal system offers increased sealing reliability and zero leakage into the motor, thereby reducing the risk of bearing and stator failure.

Compliance
Each pump is tested and approved in accordance with national and international standards, including 60034-1 and CSA. Pumps are available in explosion-proof versions for use in hazardous environments, and are approved by the Factory Mutual, European Standard and IEC.

POWER RATINGS AND SIZE

Model	**3153**	**3171**	**3202**	**3301**	**3315**
Power rating - kW	7.5–15	15–22	22–47	37–70	48–105
Discharge size - mm	80	100	100	150	150
	100	150	150	250	250
	150	250	200	300	300
	200		300	350	350
	250				

Performance, 50 Hz

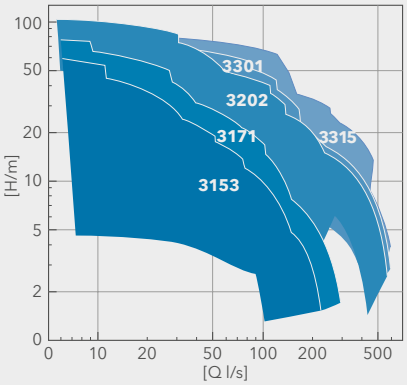



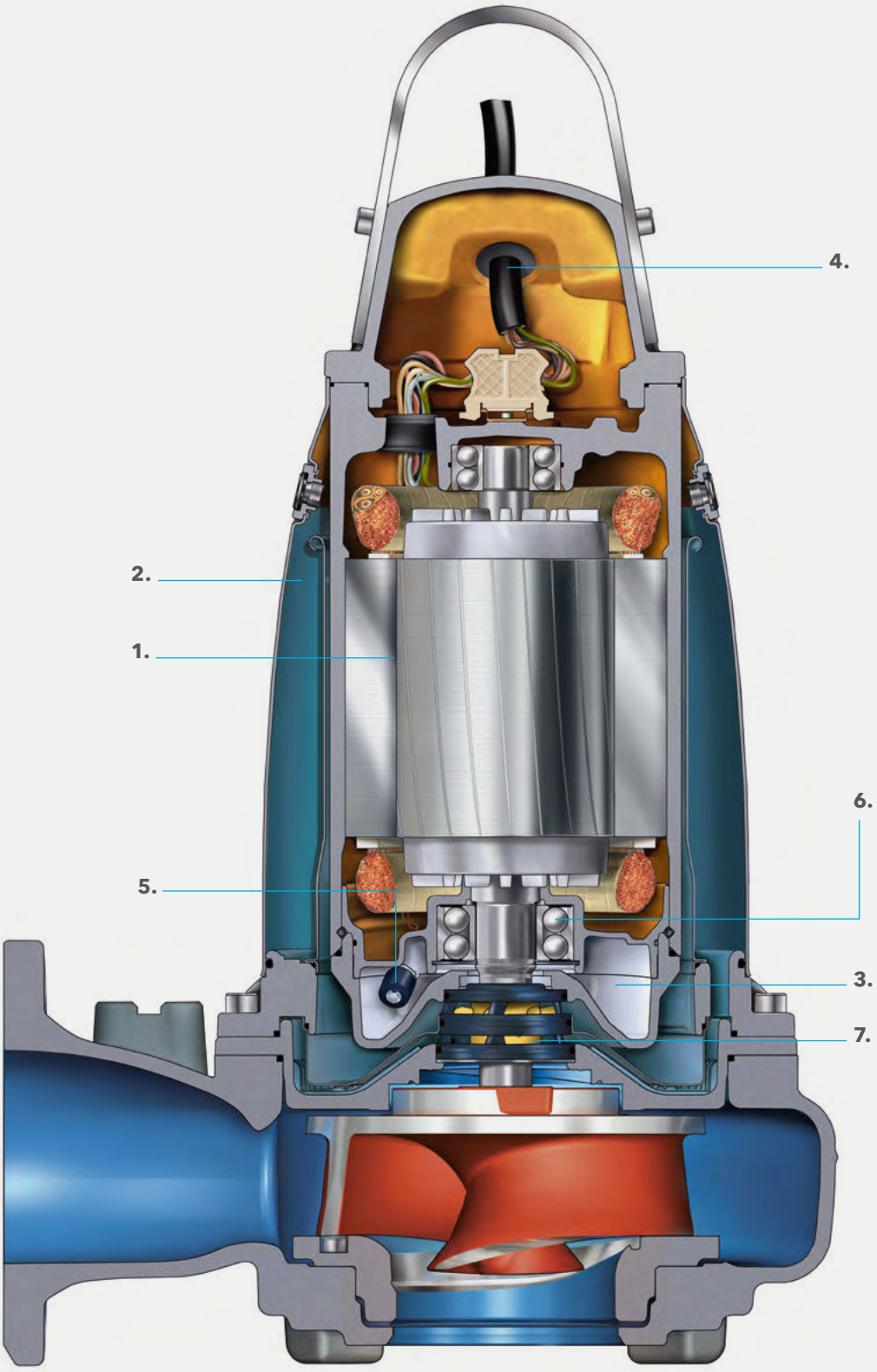
4.
2.
1.
6.
5.
3.
7.

High-capacity pumps

When higher capacity is required, the Flygt N-pump series has pumps to do the job. These models deliver unprecedented pumping power – reliably and efficiently.

1. Better heat transfer
Our specially designed and manufactured motor provides enhanced cooling because heat losses are concentrated around the stator. Trickle impregnated in resin (Class H insulation), the stator windings are rated at 180°C (355°F) and enable up to 15 starts per hour.

2. Efficient cooling
These pumps are cooled by the surrounding liquid or if equipped with a cooling jacket, by the pumped liquid or by glycol and water in a closed-loop cooling system.

3. Cable entry
Water-resistant cable entry provides both sealing and strain relief functions for a safe installation.

4. Sensors
Thermal sensors in the stator windings prevent overheating, and an analog temperature sensor monitors the lower bearing. The stator housing/leakage chamber and the junction box are equipped with leakage sensors. The sensors decrease the risk of bearing and stator failure.

5. Long-life bearings
Durable bearings provide a minimum service life of 100,000 hours.

6. Enduring seals
Two sets of mechanical shaft seals work independently for double security. The Active Seal system offers increased sealing reliability and zero leakage into the motor, thereby reducing the risk of bearing or stator failure.

Compliance
Each pump is tested and approved in accordance with national and international standards, including IEC 60034-1 and CSA. Pumps are available in explosion-proof versions for use in hazardous environments, and are approved by the Factory Mutual, European Standard and IEC.

POWER RATINGS AND SIZE

Model	**3231**	**3306**	**3312**	**3356**	**3400**	**3531**
Power rating – kW	70–215	58–100	55–250	45–140	40–310	40–680
Discharge size – mm	200	300	300	350	400	500

Performance, 50 Hz

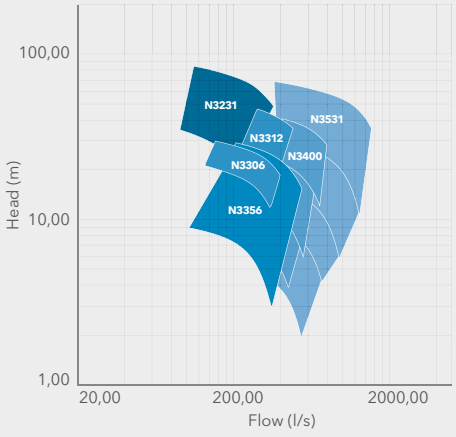



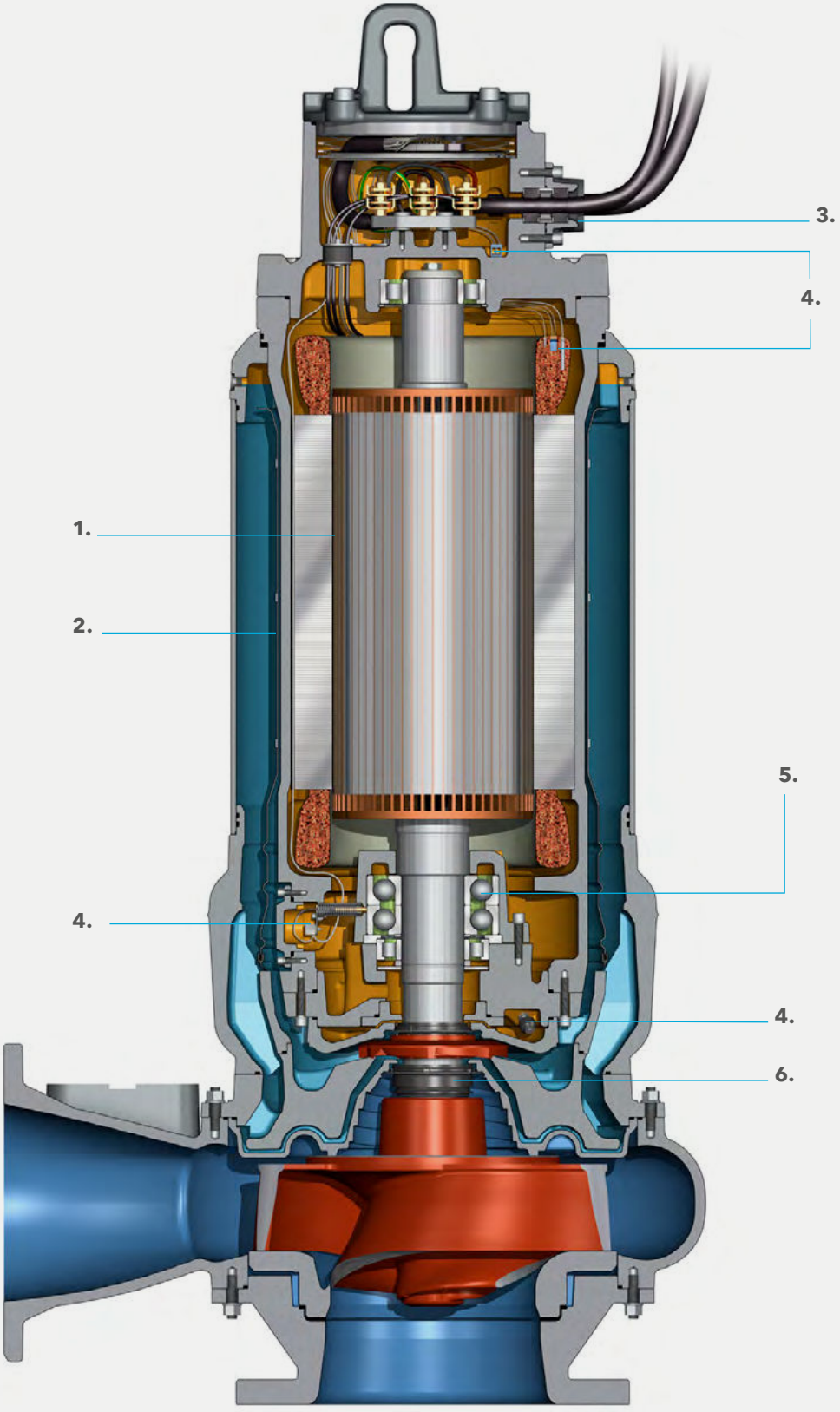
3.
4.
1.
2.
5.
4.
4.
6.

Install it and control it just the way you want it

Regardless of the size or type of N-pump you require, we offer a wide range of modular installation concepts as well as purpose-built monitoring and control systems. Our modular installation concepts let you customize inlets and outlets to fit your needs exactly.



MAS 801

MAS 801 – the smart way to monitor performance
This pump monitoring system offers powerful data management capabilities to ensure you are constantly updated on each pump's conditions and operational status. We've removed the traditional sensor cable, which means simplified handling, improved measurement quality and fewer callouts. Digital communication now takes place in the power cable, made possible by the Flygt SUBCAB® range with integrated signal leads.



Flygt SmartRun

Flygt SmartRun® – optimal reliability
For pump stations with up to three alternating pumps, the Flygt SmartRun pump controller handles pump cleaning, pipe cleaning, sump cleaning, soft starts and stops.

The integrated intelligence and variable speed control make it the perfect match for Flygt N-pumps – a combination that potentially realizes energy savings of up to 50%.

Flexible Installations



P-installation
For semi-permanent wet well installations. The pump is installed with twin guide bars on a discharge connection.



S-installation
A semi-permanent free-standing installation. Transportable version with pipe or hose connection.



T-installation
A vertically mounted, permanent dry well or in-line installation with flange connections for suction and discharge pipework.



Z-installation
A horizontally mounted, permanent dry well or in-line installation with flange connections for suction and discharge pipework.

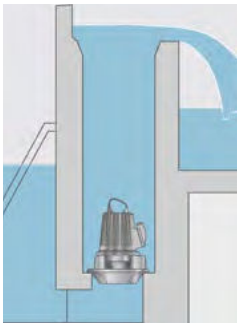

L-installation
A vertically mounted, semi-permanent, wet well column pipe installation. The well is divided into suction and discharge portions.

Take advantage of our design and engineering expertise

Are you getting the most out of your pump station designs? If you have questions regarding fluid dynamics, optimizing your sumps, water hammer calculations or even service, we can help. Flygt engineers have been researching and designing pump stations for over three decades to achieve the lowest lifecycle costs. And we have a strong service network to support you.

One of the biggest challenges in designing a pump station is to achieve a balance between efficiency and performance. Oftentimes, pump stations are over-designed, resulting in higher costs. One key focus is to secure the best possible inlet conditions while minimizing sedimentation and pump station size.

Optimizing your flow rates
Other critical factors include the number, type and arrangement of pumps; variable flow conditions in the approach area; the geometry of the structure itself; and other site-specific factors. It's also vital to consider and plan for operational concerns such as pump control schemes and access for equipment service.

Finding the optimal solution
Whether you're looking for a pre-engineered and packaged pump station, a standardized design or a custom design, we can help you find the best solution for your project's needs.

Computational fluid dynamics
To verify a proposed new sump design, we use computational fluid dynamics (CFD), a mathematical modeling technology. It allows us to analyze flow patterns under different operating conditions. Flygt pioneered the use of CFD to verify sump design, and we have been using it for more than 30 years.

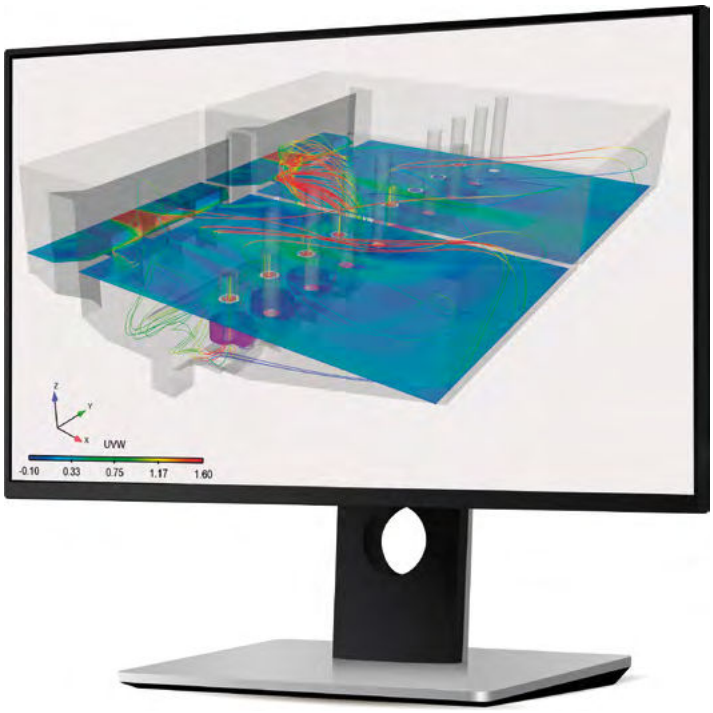

Extensive engineering know-how
We provide a broad range of engineering services, including:
- System analysis and calculations
- Sump design
- Water hammer calculations
- Pump start analysis
- Transient analysis
- Computational fluid dynamics (CFD)
- Scale model testing

Complete pre-engineered solutions for all your needs

Even better together
Do you need a swift station rollout in a municipal or commercial area? You'll be happy to know that we offer a wide range of pre-engineered packaged pump stations that make the job easier and more cost-efficient. Ideally suited for our premium N-pumps, Flygt packaged pump stations come with piping and valve systems, all installation accessories and monitoring and control equipment.

Trouble-free pumping in a package
Available in a range of designs, sizes and materials, our packaged pump stations feature a common self-cleaning design, optimized for trouble-free and efficient pumping. One of the more popular versions is the Flygt TOP design pictured here.

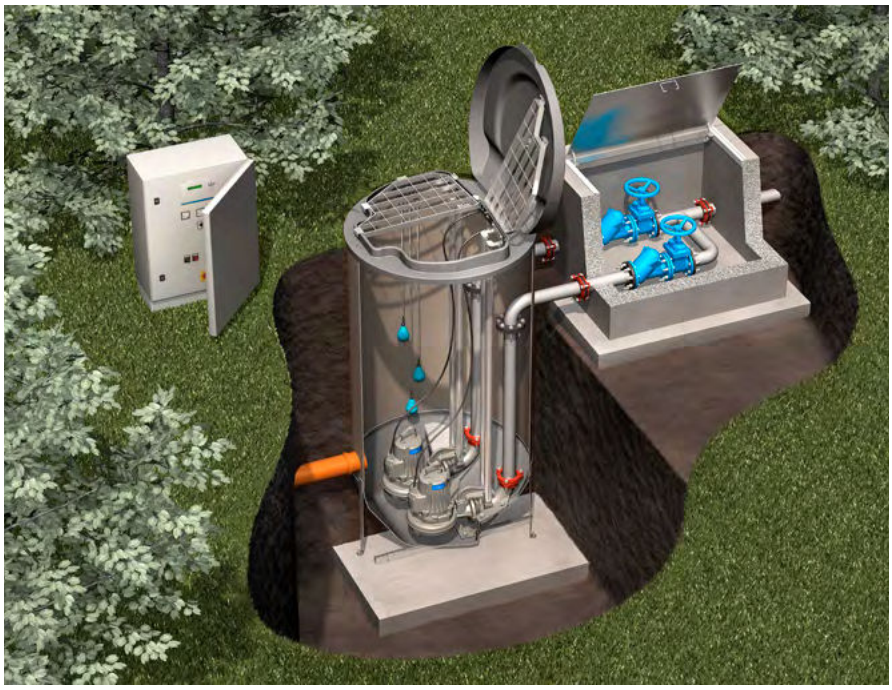

Support for your Flygt pumps

Local service support
Our global network of local service centers and service partners provides integrated services to support safe, efficient and reliable operation. Count on us for a quick, professional response and quality maintenance services, using genuine Flygt spare parts.

Genuine Flygt spare parts and warranty
When downtime isn't an option, rely on our global service network to deliver genuine Flygt spare parts – quickly and efficiently. All Flygt spare parts are backed by a 15-year availability guarantee. With our higher-capacity pumps, we provide a 20-year availability guarantee.

The power to adapt

Options table

Customize your Flygt N-pump with optional equipment.

Flygt N-pump model	3069	3085	3102	3127	3153	3171	3202	3301	3315	3231	3306	3312	3356	3400	3531
Option/Product															
Motor															
Premium efficiency (IE3)		◖	○	○	○	○	○	○		◖	◖	◖	◖	◖	◖
Hydraulics															
Guide pin	●	●	●	●	◐	◐	◖								
Hard-Iron	○	○	○	○	○	○	○	○	○	○	○	○	○	○	○
Chopper N				○	◖	◖	◖								
Adaptive N	●	●	●	●											
Seal system															
Griploc seal	●	●	●	●											
Plug-in seal					●	●	●	●	●						
Active Seal system					●	●	●	●	●	●	●	●	●	●	●
Spin-out seal protection		●	●	●	●	●	●	●	●	◖	◖	◖	◖	◖	◖
Seal flush										○	○	○	○	○	○
Cooling systems															
1. w/o cooling jacket	○	●	●	●	◖	◖	◖	◖	◖	◖	◖	◖	◖	◖	◖
2. Closed-loop cooling	○				●	●	●	●	●	◐	◐	◐	◐	◐	◐
3. Pump media	○									◐	◐	◐	◐	◐	◐
4. External	○				○	○	○	○	○	○	○	○	○	○	○
Installation method															
P	●	●	●	●	●	●	●	●	●	●	●	●	●	●	●
S	●	●	●	●	●	●	●	◖	◖	●	●	●			
T		●	●	●	●	●	●	●	●	●	●	●	●	●	●
Z		●	●	●	●	●	●	●	●	●	●	●	●	●	●
L			●	●											
Accessories															
Flush valve		○	○	○	◖	◖	◖	◖	◖						
Pump monitor *Prepared for*															
– Mini CAS	●	●	●	●	●	●	●	●	●						
– MAS						○	○	○	○	●	●	●	●	●	●
Pump control															
– SmartRun		○	○	○	○	○	○	○							
– MultiSmart		○	○	○	○	○	○	○	○	○	○	○	○	○	○
– MyConnect		○	○	○	○	○	○	○	○						
– FGC	○	○	○												

● = Standard
○ = Optional
◐ = Standard but also optional, depending on model
◖ = Standard or not available, depending on model
◖ = Optional or not available, depending on model

Xylem [ˈzīləm]

1) The tissue in plants that brings water upward from the roots;
2) a leading global water technology company.

We're a global team unified in a common purpose: creating advanced technology solutions to the world's water challenges. Developing new technologies that will improve the way water is used, conserved, and re-used in the future is central to our work. Our products and services move, treat, analyze, monitor and return water to the environment, in public utility, industrial, residential and commercial building services settings. Xylem also provides a leading portfolio of smart metering, network technologies and advanced analytics solutions for water, electric and gas utilities. In more than 150 countries, we have strong, long-standing relationships with customers who know us for our powerful combination of leading product brands and applications expertise with a strong focus on developing comprehensive, sustainable solutions.

For more information on how Xylem can help you, go to www.xylem.com

896876 . Flygt N-pump series . 1 . Master . 7 . 20240605

xylem
Let's Solve Water

Flygt is a brand of Xylem. For the latest version of this document and more information about Flygt products visit **www.xylem.com/flygt**

© 2020-2024 Xylem Inc.
Flygt, Adaptive N, SmartRun and SUBCAB are trademarks of Xylem Inc. or one of its subsidiaries.