Vertical multi-stage centrifugal pumps

Installation and operating instructions
series: MULTI VS

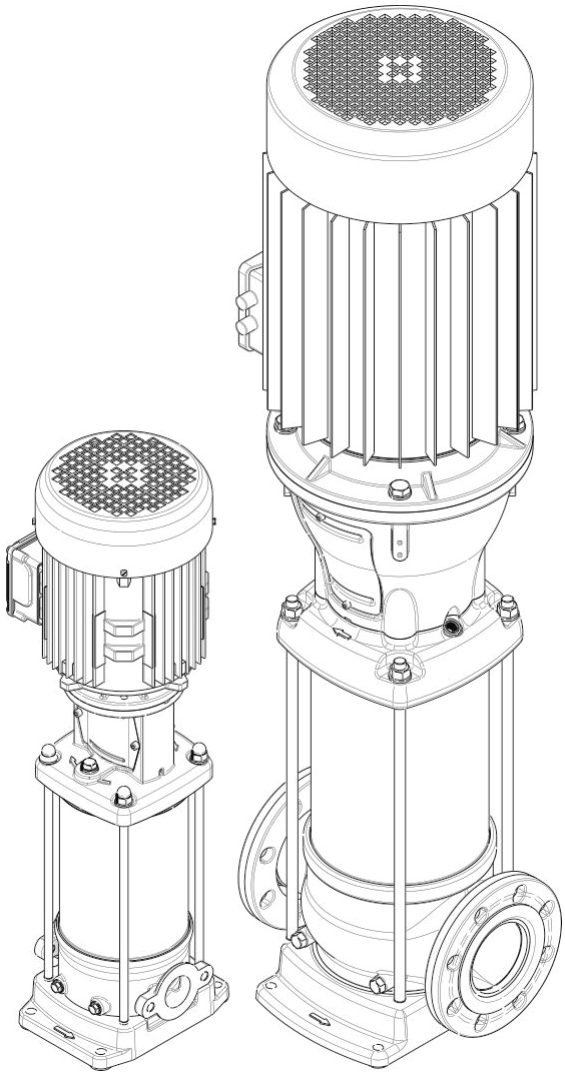

ESPA

Table of Contents

1 Manual Introduction
1.1 Preface 4
1.2 Icons and symbols 4

2 Identification, service and technical support
2.1 Obtaining data and information MULTI VS2, 4, 6, 10, 15, 25, 40, 60, 85 5

3 Warranty
3.1 Terms of warranty 6

4 Safety and environment
4.1 General 7
4.2 Users 7
4.3 Safety provisions 7
4.4 Safety precautions 7
4.5 Environmental aspects 8

5 Pump Introduction
5.1 Model key 9
5.2 Description of the product 9
5.3 Ecodesign 9
5.4 Intended use 10
5.5 Operation 10
5.6 Measuring, draining and venting 11
5.7 Modular selection 11
5.8 Working range 11

6 Transport
6.1 Transport 13
6.2 Storage 13

7 Installation instructions
7.1 Setting up the pump 14
7.2 Mounting a motor on the pump 15
7.3 Electrical installation 18
7.4 Commissioning 19

8 Operation
8.1 Operation 21

9 Maintenance
9.1 Introduction 22
9.2 Lubrication 22
9.3 Maintaining the pump for an extended period of non-operation 22

10 Failures

10.1 Failure table 23
10.2 Torques of coupling shell - pos 914.01 25

11 Annexes

11.1 EC declaration of conformity 26

1 Manual Introduction

1.1 Preface

This manual contains important information for reliable, proper and efficient operation. Compliance with the operating instructions is of vital importance to ensure reliability and a long service life of the product and to avoid any risks.
The first chapters contain information about this manual and safety in general. The following chapters provide information about normal use, installation, maintenance and repairs of the product. The annex contains the declaration(s) of conformity.

- Make yourself familiar with the content.
- Accurately follow the directions and instructions.
- Never change the sequence of the operations to be carried out.
- Keep this manual or a copy of it together with the logbook in a fixed place near the product which can be accessed by all personnel.

1.2 Icons and symbols

In this manual and in all accompanying documentation the following icons and symbols are used.



WARNING
Danger of electric Voltage. Safety sign according to IEC 417 - 5036



WARNING
Operations or procedures, if carried out without caution, may cause personal injury or damage to the product. General hazard sign according to ISO 7000-0434



ATTENTION
Is used to introduce safety instructions whose non-observance may lead to damage to the product and its functions.



ENVIRONMENTAL INSTRUCTION
Remarks with respect to the environment.

2 Identification, service and technical support

2.1 Obtaining data and information MULTI VS2, 4, 6, 10, 15, 25, 40, 60, 85

The name plate indicates the type series / size, main operating data and identification number. Please quote this information in all queries, repeat orders and particularly when ordering spare parts. If you need any additional information or instructions exceeding the scope of this manual or in case of damage, please contact ESPA nearest customer
service center.



Figure 1: Pump with motor

Table 1: Description nameplate

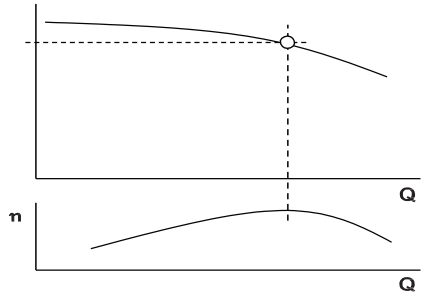

Figure 3: Duty point

Meaning	
MULTI VS25 04 F75	Item reference
400/692 50 14658/STD	Voltage + frequency + item specifications
2019W25-00001	Year and week of manufacture + Pump serial number
Q (l/min): 116-583	Flow
H(m): 81-50	Pressure
Tmax. 100º C	Max. liquid temperature
Hmin: 50m	Minimum working pressure
Hmax: 85m	Maximum working pressure
2940 min.$^{-1}$	Motor rpm
Motor: 7.5kW 10HP	Motor power
MEI≥0.7 (η=--.-)	Minimum Efficiency Index
CE	EC mark
ESPA 2025, S.L. 17820 Banyoles SPAIN	Name and address of vendor responsible for the product
Is.KL.F	Designated motor insulation

The following address data are available for service and technical support

ESPA 2025 SL **Service department** Ctra de Mieres, s/n 17820 Banyoles, Girona España	Tel: +34 972 588 000 Fax: +34 972 588 021 Internet: www.espa.com E-mail: info@espa.com

3 Warranty

3.1 Terms of warranty

The warranty period is settled by the terms of your contract or at least by the general terms and conditions of sales.

ATTENTION
Modifications or alterations of the product supplied are only permitted after consultation with the manufacturer. Original spare parts and accessories authorized by the manufacturer ensure safety. The use of other parts can invalidate any liability of the manufacturer for consequential damage.

ATTENTION
The warranty relating to the operating reliability and safety of the product supplied is only valid if the product is used in accordance with its designated use as described in the following sections of this manual. The limits stated in the data sheet must not be exceeded under any circumstances.

The warranty becomes invalid if one or more of the points below occur.

- The buyer makes modifications himself.
- The buyer carries out repairs himself or has these carried out by a third party.
- The product has been handled or maintained improperly.
- The product has non original ESPA spare parts fitted.

ESPA repairs defects under warranty when:

- They are caused by flaws in the design, the material or the production.
- They are reported within the warranty period.

Other terms of warranty have been included in the general terms of delivery, which are available upon request.

4 Safety and environment

4.1 General

This ESPA product has been developed using state-of-the-art technology; it is manufactured with utmost care and subject to continuous quality control.
E S P A does not accept any liability for damage and injury caused by not observing the directions and instructions in this manual, or in cases of carelessness during the installation procedure, use and maintenance of the product.
Non-compliance with safety instructions can jeopardize the safety of personnel, the environment and the product itself. Non-compliance with these safety instructions will also lead to forfeiture of any and all rights to claims for damages.
For example, in particular non-compliance can result in:

- failure of important pump/system functions,
- failure of prescribed maintenance and servicing practices,
- injury to persons by electrical, mechanical and chemical effects,
- hazard of the environment due to leakage of hazardous substances,
- explosions.

Depending on specific activities, extra safety measures may be required. Contact ESPA if a potential danger arises during use.



ATTENTION
The owner of the product is responsible for compliance with the local safety regulations and internal company guidelines.



ATTENTION
Not only must the general safety instructions laid down in this chapter on "Safety" be complied with, but also the safety instructions outlined under specific headings.

4.2 Users

All personnel involved in the operation, maintenance, inspection and installation of the product must be fully qualified to carry out the work involved and be aware of all applicable responsibilities, authorizations and super visions. If the personnel in question is not already in possession of the required know-how, appropriate training and instruction must be provided. If required, the operator may commission the manufacturer / supplier to take care of such training. In addition, the operator is responsible for ensuring that the contents of the operating instructions are fully understood by the responsible personnel.

4.3 Safety provisions

The product has been designed with the greatest possible care. Original parts and accessories meet the safety regulations. Modifications in the construction or the use of non-original parts may lead to a safety risk.



ATTENTION
Make sure that the product operates within its working range. Only then the product performance is guaranteed.

4.3.1 Labels on the product

The icons, warnings and instructions applied to the product are part of the safety provisions. The labels may not be removed or covered. Labels must remain legible during the entire life of the product. Replace damaged labels immediately.

4.4 Safety precautions

4.4.1 During normal use

- Contact the local electricity company for questions about the power supply.
- Cover the parts that can become hot, making direct contact impossible.
- When applicable, always place undeformed coupling protection plates to protect the coupling, before putting the pump into use. Make sure that the coupling protection plates are never in contact with the rotating coupling.
- Always close the terminal box of the motor.

4.4.2 During installation, maintenance and repair

Only authorised personnel may install, maintain and inspect the product and repair electrical components. Observe the local safety regulations.



WARNING
Always disconnect the energy supply to the product first, before installation, maintenance and repairs. Secure this disconnection.



WARNING
Surfaces of a pump can be hot after continuous operation.



WARNING
Make sure that no one can be near rotating components when starting a pump.



WARNING
Handle a pump with dangerous liquids with the utmost care. Avoid danger for persons or the environment when repairing leakages, draining liquids and venting. It is strongly recommended to place a leakage tray under the pump.



WARNING
Immediately following completion of the work, all safety-relevant and protective devices must be re-installed and / or re-activated.



WARNING
Please observe all instructions set out in the chapter "Commissioning/Start-up" before returning the product to service.

4.5 Environmental aspects

4.5.1 General

ESPA products are designed to function in an environmentally friendly way during their entire life. Therefore, when applicable, always use biodegradable lubricants for maintenance.



ENVIRONMENTAL INSTRUCTION
Always act according to the laws, by-laws regulations and instructions with respect to health, safety and the environment.

4.5.2 Dismantling

The owner is responsible for the dismantling and environmentally friendly disposal of the product.



ENVIRONMENTAL INSTRUCTION
Ask at the local government about the re-use or the environmentally friendly processing of discarded materials.

5 Pump Introduction

5.1 Model key

Table 5: Model key Example

	MULTI VS	25	04	F	75	
Series	MULTI VS					Product series
Capacity		25				Size (Capacity in m^3/h at Q_{opt})
Stages			04			Number of stages
Materials				F		All wetted parts Stainless Steel 1.4301 / AISI 304 - Round flange
				N		All wetted parts Stainless Steel 1.4401 / AISI 316
				C		Cast iron pump foot and top bracket hydr. 1.4301/AISI 304
Motor					75	Motor power in kW (x10)

5.2 Description of the product

The vertical, single or multi stage centrifugal pump series are designed for pumping clean, or slightly aggressive, watery mediums.
Suction and discharge connections of the pump are in-line, making the pump easy to install.

The hydraulic assembly is driven by an electric motor. All hydraulic parts of the pump are made of stainless steel.

5.3 Ecodesign

Product according to Regulation 547/2012 (for water pumps with maximum shaft power rating of 150 kW) to Directive 2009/125/EC "Ecodesign Directive":

- Minimum Efficiency Index: See nameplate, legend for nameplate. See table 1 Description nameplate.
- The reference value MEI of a water pump with the best efficiency is = 0.70.
- Year built: See nameplate, legend for nameplate. See table1 Description nameplate.
- Manufacturer's name or trademark, official registration number and place of production: See manual or order documentation.
- Information about type and size of the item: See nameplate, Legend of the nameplate. See table 1 Description nameplate.
- Performance curves of the pump, including efficiency characteristics: See documented curve.
- The efficiency of a pump with a corrected impeller is usually lower than that of a pump impeller with a full diameter. A pump with a corrected impeller is adapted to a certain duty

point, thereby reducing the energy consumption. Minimum Efficiency Index (MEI) refers to the full impeller diameter.

- The operation of this water pump at different operating points can be more efficient and more economical when it is controlled, for example using a variable speed controller which adjusts the pump operation to the system.
- Information for disassembly, recycling or disposal after the final shutdown: See sub chapter 4.5.2 Dismantling.
- Information about the efficiency reference value or MEI = 0.7 (0.4) benchmark index for the pump on the basis of the pattern in the picture, please visit: http://www.espa.com.

5.4 Intended use

The pumps Multi VS are suitable to transport and increase the pressure of cold and hot water without wear to parts within the indicated working range. The transport of liquids with a different viscosity or density than water is possible as well. For this a motor with an adjusted power could be required. Ask ESPA or your distributor for advice.

Any other or further use of the pump is not in conformity with its intended use. ESPA does not accept any liability for any damage or injury that results from this. The pump is produced in accordance with the current standards and guidelines. Use the pump only in a perfect technical state, in conformance with the intended use described below.

The *Intended use* as laid down in ISO 12100:2010 is the use for which the technical product is intended according to the specifications of the manufacturer. The use of the product has been described in the sales brochure and in the user manual. Always observe the instructions given in the user manual. When in doubt the product must be used as becomes evident from its construction, version and function.

5.5 Operation

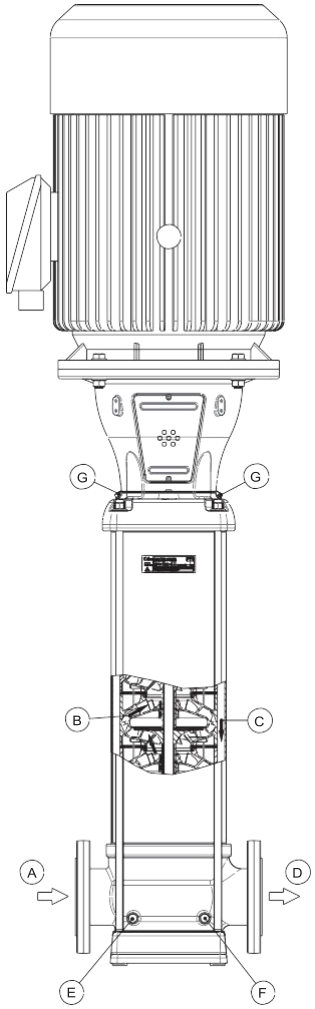

Figure 5: MULTI VS85

The rotating impeller causes the pressure at the inlet of the impeller to drop. This decrease in pressure creates the flow through the suction connection (A). Every stage (B) consists of an impeller and a diffusor. The capacity of the pump is determined by the size of the passageway of the stage. The pressure of the stage is determined by the diameter of the impeller. Because of the modular type of construction it is possible to choose the number of impellers most suited to the required duty point. After leaving the last impeller the medium flows between the pump stages and the outer sleeve (C) and exits the pump at the discharge connection (D)

5.6 Measuring, draining and venting

The pump is provided with plugs for measuring, draining and venting.
Connection (E) is meant to drain the inlet part of the pump, or to measure the inlet / suction pressure using a G ¼ connection.
Connection (F) is meant to drain the outlet part of the pump, or to measure the discharge pressure using a G ¼ connection.
Connections (G) are meant to vent the pump system when the pump is not in operation, or to measure the discharge pressure of the pump using a G 3/8 connection.

5.7 Modular selection

For an optimal match with the application, the pump is assembled out of modules which are selected depending on their specifications.
The basic modules are:

- **Basic pump model.** Defines the capacity and head, the basic material and allowable pressures and temperatures.
- **Connections.** Defines the connection size, pressure class and allowable temperatures.
- **Sealings.** Defines material of the elastomers, shaft seal type and allowable pressures and temperatures.
- **Electric motor.** Defines all requirements of the motor such as size, power, supply voltage, frequency and possible motor accessories.

5.8 Working range

The working range depends on the basic hydraulic design, the type of connection and sealings. The module in the pump with the strictest specification determines the allowable pressure and temperature of the medium in the pump. The general working specifications can be summarised as follows:

Table 6: General working range specification

Pump type	MULTI VS	note
Ambient temperature [°C]	-20 up to 40	1,2
Minimum inlet pressure	$NPSH_{req.}$ + 1 m	
Viscosity [cSt]	1-100	3
Density [kg/m^3]	1000-2500	2
Cooling	forced motor cooling	
Minimum frequency [Hz]	30	
Maximum frequency [Hz]	60	4
Maximum number of starts	see motor data sheet	5
Noise emission	see motor data sheet	6
Allowable size of solids pumped	5 µm to 1 mm	

1. Avoid freezing the pump.
2. If the ambient temperature exceeds the above value or the motor is located more than 1000 m above sea level, the motor cooling is less effective and could require an adapted motor power. Please contact your supplier for more detailed advice.
3. Deviation in viscosity and/or density could require an adapted motor power. Please contact your supplier for more detailed advice.
4. Pumps that are intended for 50 Hz operation, may not be connected to 60 Hz power supply.
5. Frequent start/stops, in particular in combination with higher pressure differences (Δp) may result in a shortened product lifetime. Consult your supplier for such applications.
6. Only the noise emission of the motor is documented.

ATTENTION
The temperature difference between the medium and the pump should never exceed 60 °C. The pump must be filled / heated-up slowly in any case where the difference between pump and medium is more then 30 °C to avoid any chance of a thermal shock.

For minimum/maximum flow at medium temperature of 20 °C see table 7 Minimum/maximum capacity (Qmin/max); for higher temperatures see figure 6 Minimum capacity vs. temperature (in % of Q optimum)

Table 7: Minimum/maximum capacity ($Q_{min/max}$)

size	$Q_{min/max}$ [m^3/h]							
	50 Hz				60 Hz			
	2 pole		4 pole		2 pole		4 pole	
	Min.	Max.	Min.	Max	Min.	Max.	Min.	Max.
2	0.2	3.3			0.2	4.0		
4	0.4	6.5			0.5	7.8		
6	0.6	9.0			0.8	8.6		
10	1.1	13.2	0.5	6.6	1.3	15.8	0.6	7.9
15	1.6	22.5	0.8	11.3	2.0	27.0	1.0	13.5
25	2.8	35.0	1.4	17.5	3.1	42.0	1.6	21.0
40	4	54	1.9	27	4.9	65	2.3	32.5

size	$Q_{min/max}$ [m³/h]							
	50 Hz				60 Hz			
	2 pole		4 pole		2 pole		4 pole	
	Min.	Max.	Min.	Max	Min.	Max.	Min.	Max.
45	4.6	57			5.1	65		
60	5.3	57	2.6	38	6.4	92	3.2	46
65	6.1	75			6.1	90		
85	8.5	110	4.3	53.9	10.2	132.0	5.1	65.1

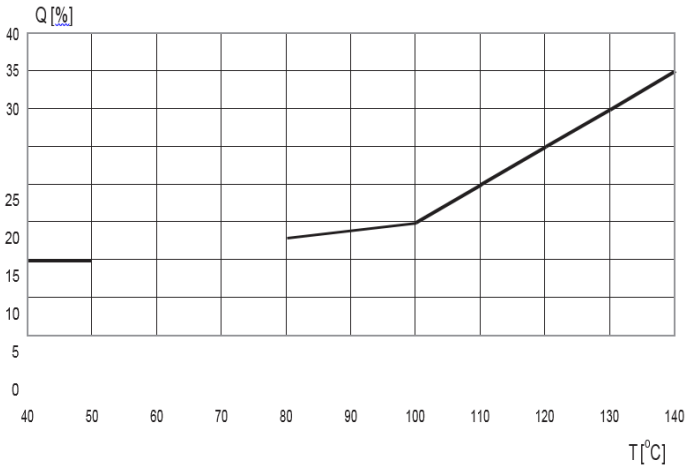

Figure 6: Minimum capacity vs. temperature (in % of Q optimum)

5.8.1 Detailed working range
MULTI VS2, 4, 6, 10, 15, 25, 40, 60, 85

For the actual working range of the pump see the name plate.

6 Transport

6.1 Transport

1. Transport the pump in the position as indicated on the pallet or packaging.
2. Make sure the pump is stable.
3. If present, observe the instructions on the packaging.

WARNING
Lift the pump, if necessary using a hoist and suitable slings. Attach the slings to the transport lugs on the packaging, where present.

WARNING
The pump must be lifted according to the current hoist guidelines. Only qualified personnel is allowed to lift the pump.

WARNING
Do not lift the pump by using the frequency converter (if placed), electrical parts or the motor cover. Be sure that the pump is always in balance.

WARNING
Pumps could tilt while lifting. Do not remove the lifting devices from the pump before the pump is placed and mounted correctly.

Table 12: Transport positions

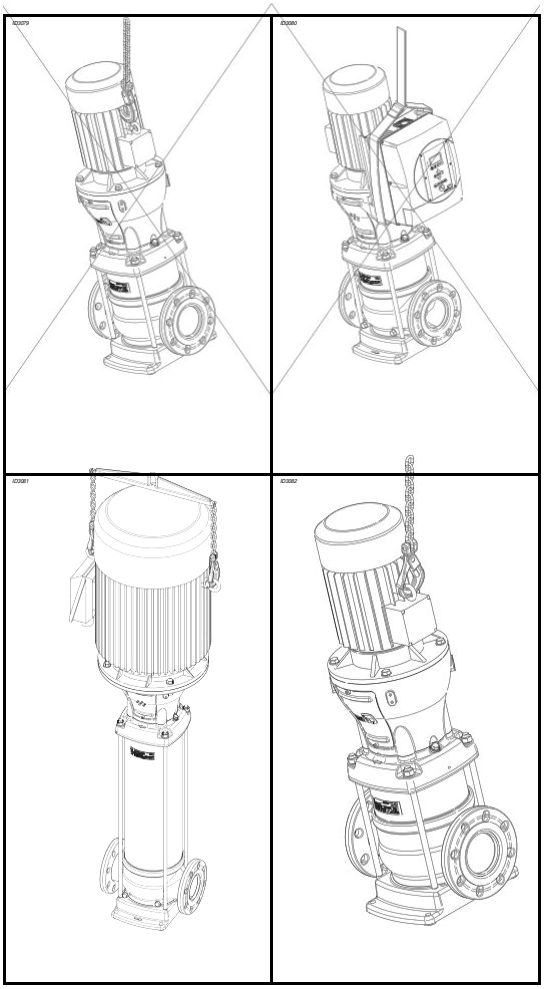

6.2 Storage

Fill the pump with glycol in order to protect it against the risk of frost.

Table 13: Storage

Storage	
$t_{ambient}$ [°C]	-10/+40
Max. rel. humidity	80% at 20°C not condensing

6.2.1 Inspection during storage

1. Turn the shaft every three months and just before putting into operation.

7 Installation instructions

7.1 Setting up the pump

ATTENTION
Avoid stress in the pump casing caused by misalignment in the piping system. Please see table below.

Table 14: Allowable forces MULTI VS F(N)

Type	DN [mm]	Force [N]			
		Fx	Fy	Fz	Σ F
MULTI VS2 F(N)	25	3300	-2400	1700	4420
MULTI VS4 F(N)	25	3300	-2400	1700	4420
MULTI VS6 F(N)	32	3300	-2400	1700	4420
MULTI VS10 F(N)	40	4000	-3100	3100	5930
MULTI VS15 F(N)	50	4000	-3100	3100	5930
MULTI VS25 F(N)	65	3200	-3500	3500	5890
MULTI VS40 F(N)	80	4000	-1800	2000	4820
MULTI VS60 F(N)	100	4000	-1800	2000	4820
MULTI VS85 F(N)	100	3500	-2500	1000	4420

ATTENTION
For the values mentioned in the tables above, it is assumed that they occur simultaneously.

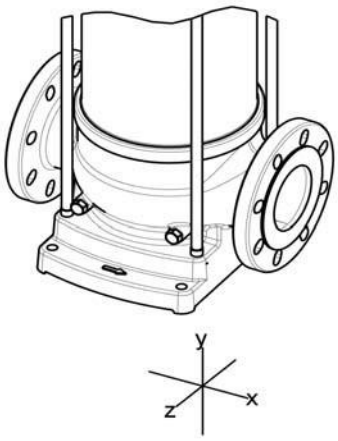

Figure 8: Allowable forces

ATTENTION
Pumps which do not stand steady or stable on their own, should be mounted on a rigid and stable base.

ATTENTION
Locate the pump at the place with the lowest risk for noise nuisance.

1. Place and install the pump on a level, stable surface in a dry and frost-free room.
2. Make sure that sufficient air can reach the cooling fan of the motor. For this purpose the free space above the cooling fan should be at least 1/4 of the diameter of the fan cover air intake.
3. Install the pump with counter flanges. For pumps with non-standardised connections, counter flanges are delivered separately.
4. It is advised to install a shut off valve on the supply and on the delivery connection of the pump.
5. To avoid medium flowing back through the pump, when idle, make sure a non-return valve is installed.
6. Make sure that the inlet of the pump is never clogged.

7.1.1 Indicators

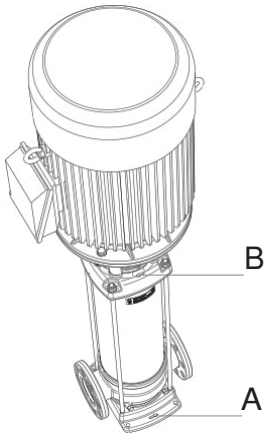

Figure 9: Pump indicators

The arrow (A) on the pump foot indicates the flow direction of the liquid. The arrow (B) on the top bracket indicates the rotating direction of the motor.

7.1.2 Install bypass

Install a bypass if the pump operates against a closed valve. The required capacity of the bypass is at least 10% of the optimum volume flow. At high operating temperatures a higher volume flow is required. Refer to the table "Minimum volume flows" in the paragraph "Working range" and fig 6 Minimum capacity vs. temperature (in % of Q optimum).

7.2 Mounting a motor on the pump

ATTENTION
It is to be advised to use a special designed ESPA motor. Before installing an other brand/standard IEC-norm motor, ESPA has to be consulted to judge the applicability.

The following motor specifications are required:

- Increased power output (when applicable)
- Reinforced bearing at driven end (to withstand the axial force)
- Fixed bearing at driven end (to minimize the axial play)
- Smooth shaft, no key way (to improve the coupling grip and to improve the motor balance)

The advised bearings per motor type are:

Table 18: Minimum required motor Driven-end bearing

Bearing type			
Power output	**1 phase 50 Hz**	**3 phase 50/60 Hz**	
[kW]		**2 pole**	**4 pole**
0.25			6202-2Z-C3
0.37	6202-2Z-C3	6203-2Z-C3	6202-2Z-C3
0.55	6202-2Z-C3	6203-2Z-C3	6202-2Z-C3
0.75	6204-2Z-C3	6204-2Z-C3	6202-2Z-C3
1.1	6204-2Z-C3	6204-2Z-C3	6205-2Z-C3
1.5	6305-2Z-C3	6305-2Z-C3	6205-2Z-C3
2.2	6305-2Z-C3	6305-2Z-C3	6206-2Z-C3
3		6306-2Z-C3	6206-2Z-C3
4		6306-2Z-C3	6208-2Z-C3
5.5		6308-2Z-C3	6208-2Z-C3
7.5		6308-2Z-C3	6208-2Z-C3
11		7309	
15		7309	
18.5		7309	
22		7311	
30		7312	
37		7312	
45		7313	

7.2.1 Install the motor on pumps, supplied without motor, with a standard mechanical seal.

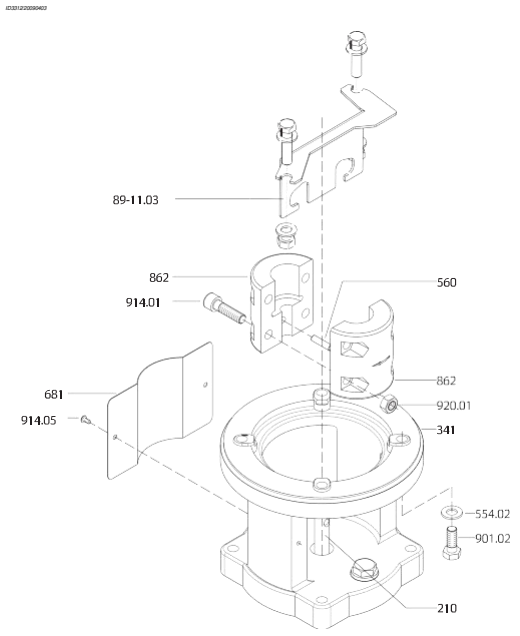

20090321

Figure 10: Without motor

1. Remove the coupling guards (681) and the coupling shells (862).
2. Remove the seal protection bracket (89-11.03) and its mounting material. For pumps with a taper piece (722) (with motor of 5.5 kW or higher), the two bolts (914.02 or 901.02) has to be placed back to connect the taper piece to the motor stool. Thoroughly clean the motor stool (341), the shaft (210), the coupling shells (862) and the motor shaft.
3. Loosely fasten the coupling shells (862) with the coupling pin (560) on the shaft (210). Use the hexagon socket head cap screw (914.01) and the nut (920.01) for this. (When the pump is equipped with a steel coupling, never use the same coupling twice but order a new one).
4. Place the motor on the motor stool (341).
5. Tighten the lower bolts of the coupling shells (862) in such way, that the coupling slightly clamps around the motor shaft.
6. For pump series:
   MULTI VS2, 4, 6, 10, 15, 25, 40, 60, 85
   Use a sufficient tyre iron to lift the coupling (and hydraulic assembly) 1.5 mm higher then the lowest position. For easy and accurate adjustment of the coupling contact your supplier for the appropriate Toolkit For Adjustment Hydraulics.

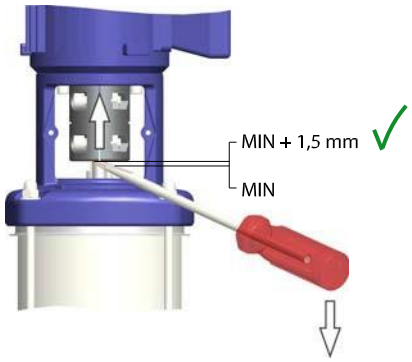

20090559

Figure 11: fixed seal

WARNING
Correct seal adjustment max. 1.5 mm higher then the lowest position.

ATTENTION
For motors of 11 kW or higher, block the rotor when adjustments are made to the coupling. This ensures that the rotor is not lifted out of its bearings.

7. For pump series:
   MULTI VS45, 65

Use a sufficient tyre iron to lift the coupling (and hydraulic assembly) to the maximum upwards position and lower it 1 mm from this position.

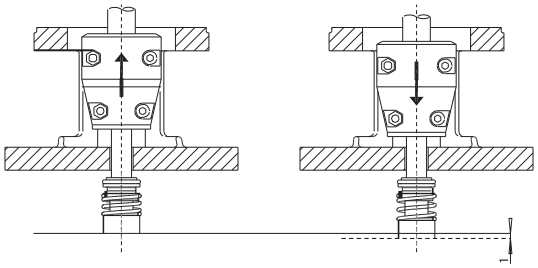

20070376

Figure 12: Positioning the seal

WARNING
Correct seal tension max. -1 mm lower than the maximum upwards position!

ATTENTION
For motors of 11 kW or higher, block the rotor when adjustments are made to the coupling. This ensures that the rotor is not lifted out of its bearings.

8. Fully tighten the couplings at the given torque (see "Torques" in the annexes). Make sure that the gaps between the couplings are equally divided on both sides (see drawing).

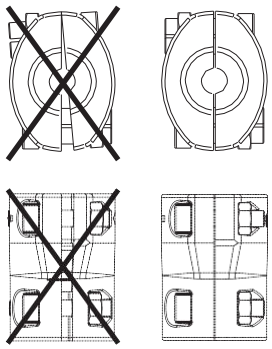

20030733

Figure 13: Position of the coupling

9. Attach the coupling guards (681) with the socket head cap screws (914.05) to the motor stool (341).
10. Connect the power supply. see § 7.3 Electrical installation.

7.2.2 Installing the motor on pumps, supplied without motor, with a cartridge seal

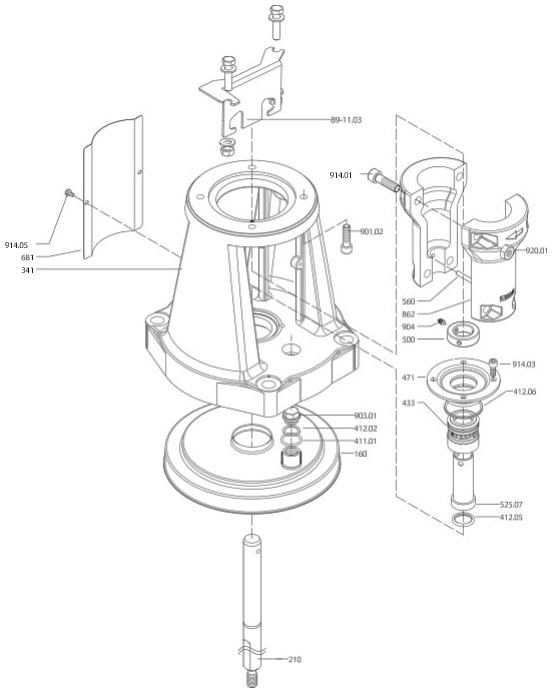

20090322

Figure 14: With motor

1. Remove the coupling guards (681) and the coupling shells (862).
2. Remove the seal protection bracket (89-11.03) and its mounting material. For pumps with a taper piece (722) (with motor of 5.5 kW or higher), the two bolts (914.02 or 901.02) has to be placed back to connect the taper piece to the motor stool. Thoroughly clean the motor stool (341), the shaft (210), the coupling shells (862) and the motor shaft.
3. Loosely fasten the coupling shells (862) with the coupling pin (560) on the shaft (210). Use the hexagon socket head cap screw (914.01) and the nut (920.01) for this. (When the pump is equipped with a steel coupling, never use the same coupling twice but order a new one).
4. Place the motor on the motor stool (341).
5. Loosen the three cartridge grub screws (904) one turn.
6. Push the hydraulic pump assembly in the lowest position.
7. Tighten the three cartridge grub screws (904) firmly to the shaft.
8. Tighten the lower bolts of the coupling shells (862) so that the coupling slightly clamps around the motor shaft.

9. For pump series:
MULTI VS2, 4, 6, 10, 15, 25, 40, 60, 85
Use a sufficient tyre iron to lift the coupling (and hydraulic assembly) 1.5 mm higher then the lowest position. For easy and accurate adjustment of the coupling contact your supplier for the appropriate Toolkit For Adjustment Hydraulics.

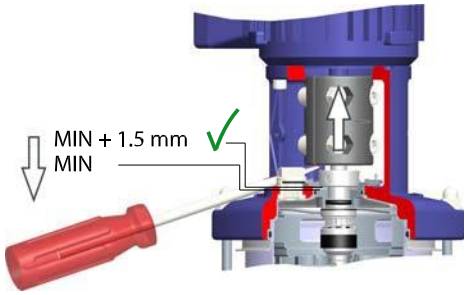

20091316

Figure 15: Cartridge seal

WARNING
Correct seal adjustment max. 1.5 mm higher then the lowest position.

ATTENTION
For motors of 11 kW or higher, block the rotor when adjustments are made to the coupling. This ensures that the rotor is not lifted out of its bearings.

10. For pump series:
MULTI VS45, 65
Use a sufficient tyre iron to lift the coupling (and hydraulic assembly) to the maximum upwards position and lower it 1 mm from this position.

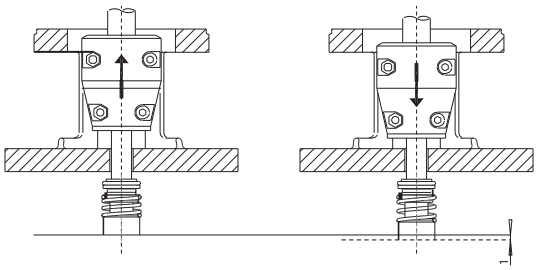

20070376

Figure 16: Positioning the seal

WARNING
Correct seal tension max. -1 mm lower than the maximum upwards position!

ATTENTION
For motors of 11 kW or higher, block the rotor when adjustments are made to the coupling. This ensures that the rotor is not lifted out of its bearings.

11. Fully tighten the couplings at the given torque (see "Torques" in the annexes). Make sure that the gaps between the couplings are equally divided on both sides (see drawing).

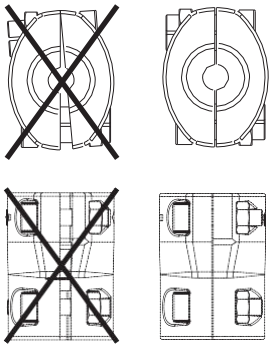

20030733

Figure 17: Position of the coupling

12. Install the coupling guards (681) with the socket head cap screws (914.05) to the motor stool (341).
13. Connect the power supply. see § 7.3 Electrical installation.

7.3 Electrical installation

WARNING
In accordance with the local regulations only authorised personnel is allowed to make electrical connections to the motor.

ATTENTION
Connect the motor according to figure: 18 Motor connections and always check the rotation direction.

Electrical connections:

- Make sure that the motor specifications correspond with the power supply to which the pump motor is connected. Consult "Electrical diagrams" for the correct connection diagram.
- Connect the motor using a motor safety switch.

Example may differ upon chosen motor

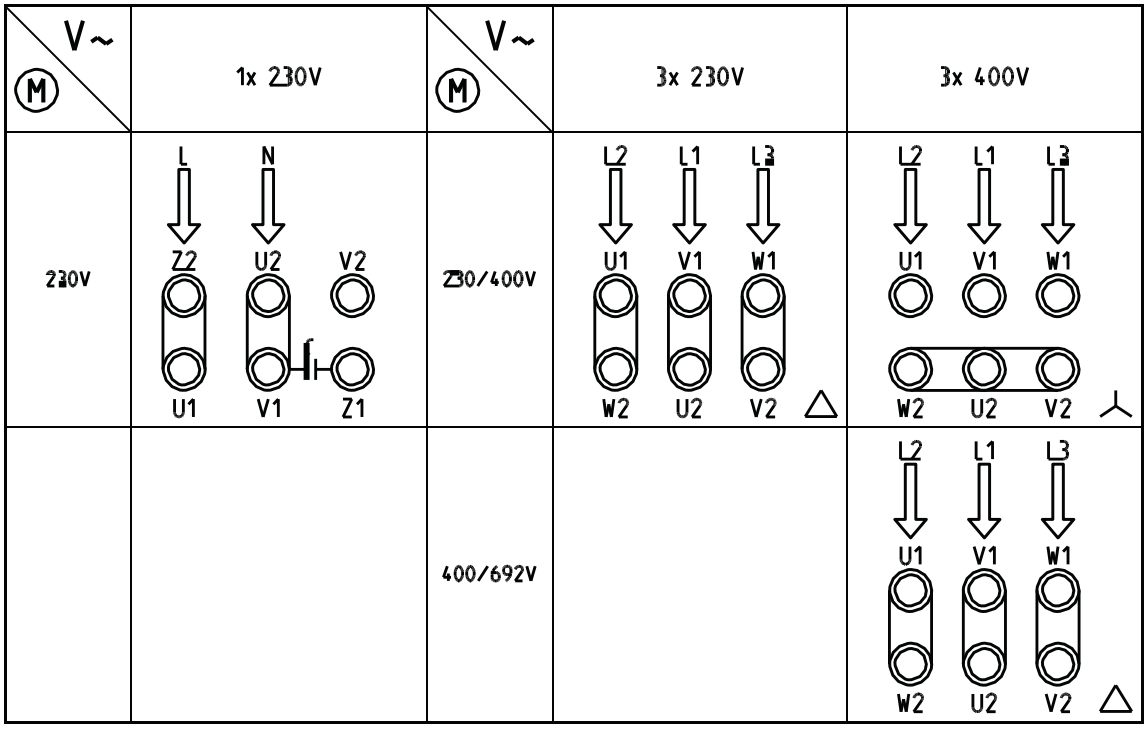

20130499-A

Figure 18: Motor connections

PTC connection STM 140 EK:

- Standard motors 3 kW and up are equipped with a PTC thermistor. Consult Table 19 Technical specifications PTC STM 140 EK.
- Connect the PTC to a thermistor relay.

Table 19: Technical specifications PTC STM 140 EK

	Value
t_n [°C]	140
$R_{20\,°C}$ [Ω]	~ 20
$R_{tn-20\,°C}$ [Ω]	~ 250
$R_{tn-5\,°C}$ [Ω]	< 550
$R_{tn+5\,°C}$ [Ω]	> 1330
$R_{tn+15\,°C}$ [Ω]	> 4000
U_n [VDC]	2.5 < U < 30

7.4 Commissioning

WARNING
The pump must be switched off when it is not completely filled up.

ATTENTION
Seen from the top of the motor the pump should rotate clockwise. See 7.1.1 Indicators (B). In case of a 3-phase motor the rotating direction can be changed by exchanging two of the three phases.

7.4.1 In an open or closed circuit with sufficient supply pressure

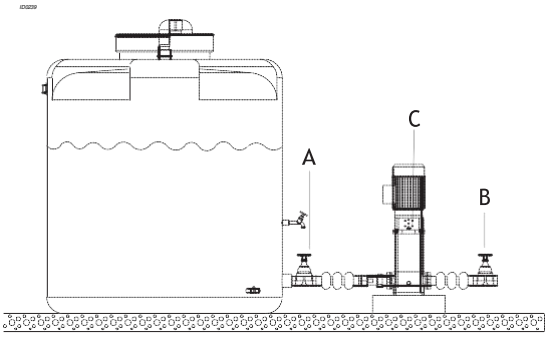

Figure 19: Pump with open or closed circuit

ID239

1. Close the suction shut-off valve (A) and the outlet shut-off valve (B).
2. Open the fill plug (C).
3. Gradually open the suction shut-off valve until the liquid flows from the fill plug (C).
4. Close the fill plug.
5. Fully open the suction shut-off valve.
6. Check the rotational direction of the pump.
7. Fully open the outlet shut-off valve.

7.4.2 In an open circuit with a liquid level lower than the pump

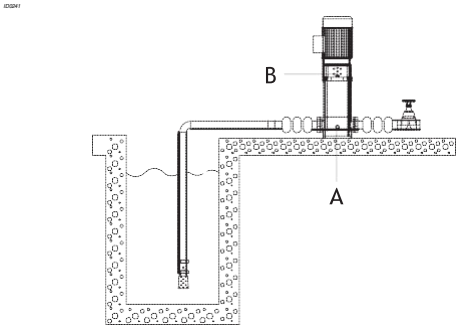

Figure 20: Liquid level lower then pump

ID241

1. Remove the fill plug (B) from the top bracket.
2. Close the outlet shut-off valve.
3. Fill the pump housing to the maximum through the fill plug with the liquid that is to be pumped.
4. Insert the fill plug in the top bracket.
5. Check the rotational direction of the pump.
6. Open the outlet shut-off valve.

7.4.3 After an extended period of non-operation or storage

During first start-up, check the mechanical seals for leakage due to seizure or dehydration of the lubricating film. If so, please proceed as following:

1. Turn shaft manually or;
2. Check if the mechanical seal is still leaking.

If the mechanical seal is still leaking:

1. Disassemble the mechanical seal.
2. Thoroughly clean and degrease the running surfaces.
3. Assemble the mechanical seal again and retry start-up.

If this doesn't solve the shaft leakage, replacement of the mechanical seal is necessary.

8 Operation

8.1 Operation

The pump is controlled externally and therefore does not need any operation guidance.

9 Maintenance

9.1 Introduction



WARNING
Observe the general safety precautions for installation, maintenance and repair.

Regular maintenance is necessary for the correct operation of a pump. Please contact your supplier for maintenance of the pump.

9.2 Lubrication

Standard motors, with a maximum power of 7.5 kW, are provided with maintenance free sealed bearings.

Motors with lubricating nipples must be lubricated after 2000 hours. If the pump works under extreme conditions, such as high vibrations and temperatures, the motors must be lubricated more often.

Use a lithium based -30 °C / 160 °C bearing lubricant (about 15 grams).

When the pump is delivered without a motor and fitted with an other brand or the standard motor is replaced by an other brand than ESPA, please consult the maintenance instructions of the motor supplier.



ATTENTION
Also follow the instructions in § 7.2 Mounting a motor on the pump.

9.3 Maintaining the pump for an extended period of non-operation

Turn the shaft every three months[1]. This protects the seals from seizure.

Protect the pump if there is a risk of frost. Proceed as follows:

1. Close all pump valves.
2. Drain each pump and/or the system.
3. Remove all plugs from the pump.
4. Open the shut-off and fill/air vent plug, if present.

1. period may vary per application or medium. Please consult your sales representative for application details.

10 Failures

10.1 Failure table



WARNING
Observe the general safety precautions before installation, maintenance and repair.

Problem	Possible cause	Possible solution	Checkpoints
Leakage along the shaft.	Running surfaces of the mechanical seal worn or damaged.	Replace the mechanical seal.	Check the pump for dirt / abrasive parts.
	New pump: seal stuck due to assembly.	Open and close the outlet shut-off valve quickly during operation.	
	Mechanical seal mounted incorrectly.	Install the mechanical seal correctly. Use water and soap as a lubricant.	
	Elastomers affected by medium.	Use the right rubber compound for the mechanical seal.	
	Pressure too high.	Use the right type of mechanical seal.	
	Shaft worn.	Replace shaft and mechanical seal.	
	Pump has been operating without water.	Replace the mechanical seal.	
Leakage along the shroud at the top bracket or at the pump foot.	O-ring worn	Replace the O-ring.	
	O-ring not resistant to the medium to be pumped	Replace O-ring by an O-ring with better resistance	
	Too much stress on the pump foot; it becomes oval.	Decrease stress on piping. Mount the pump foot without stress. Support the connections.	
Pump is vibrating or noisy.	Coupling mounted incorrectly.	Install the coupling in parallel.	
	Faulty setting of the hydraulic assembly.	Adjust the assembly according to the manual.	
	There is no water in the pump.	Fill and vent the pump.	
	No supply of medium.	Make sure there is sufficient supply. Check for blockages in the supply line.	
	Bearings of pump and/or motor worn.	Have the bearings replaced by a certified company.	
	Available NPSH too low (cavitation).	Improve suction condition.	

Problem	Possible cause	Possible solution	Checkpoints
Pump is vibrating or noisy.	Pump does not work in its working range.	Select another pump or adjust the system to work within its working range.	
	Pump is standing on an uneven surface.	Level the surface.	
Malfunction.	Internal blockage in the pump.	Have the pump inspected by a certified company.	
Pump does not start.	No voltage on the power terminal.	Check the power supply.	• Circuit • Main switch • Fuses
		Check the motor safety relay	• Earth leakage switch • Protective relay
	Thermal motor safety switch triggered.	Reset the thermal motor-safety. Contact the supplier, if this problem occurs more often.	Check if the correct value is set. Find the correct value (I_{nom}) on the motor type plate.
The motor is running, but the pump does not work.	The coupling between pump- and motor shaft is loose.	Tighten the connecting screws to the required torque.	
	The pump shaft is broken.	Contact the supplier.	
Pump supplies insufficient capacity and/or pressure.	Outlet and/or inlet shut-off valve is closed.	Open both shut-off valves.	
	There is air in the pump.	Vent the pump.	
	The suction pressure is insufficient.	Increase the suction pressure.	
	Pump rotates in the wrong direction.	Change over L1 and L2 of the three phase supply.	
	The suction line has not been vented.	Vent the suction line.	
	Air bubble in the suction line.	Install the suction line with pump end higher than the other end.	
	Pump sucks air because of leakage in the suction line.	Repair the leakage.	
	Water flow too low. So air bubbles clog up in the pump.	Make sure the flow increases or use a smaller pump.	
	The diameter of the suction line is too small.	Increase the diameter of the suction line.	
	Capacity of water meter in the supply line is too small.	Increase the capacity of the water meter.	
	Foot valve blocked.	Clean the foot valve.	
	The impeller, the diffuser or stage is blocked.	Clean the inside of the pump.	
	O-ring between impeller and diffuser is gone.	Replace the O-rings.	
	O-ring not resistant to the medium to be pumped.	Replace O-ring by an O-ring with better resistance.	

10.2 Torques of coupling shell - pos 914.01

Material	Dimensions	Torques [Nm]
Steel	M6	16
Steel / Cast iron	M8	30
Aluminium	M8	22
Cast iron	M10	70

11 Annexes

11.1 EC declaration of conformity

ESPA 2025 SL
Ctra. de Mieres, s/n
17820 Banyoles, Girona, España
Tel: +34 972 588 000

Hereby declares on his own responsibility, that the products:
Vertical multi-stage centrifugal pumps, series: MULTI VS

> to which this declaration refers, is in accordance with the following standard: **EN 809: 1998+A1:2009/AC:2010** according to the provisions of the harmonized standard for pumps and which implies the regulations of **Machine directive 2006/42/EC, EMC directive 2004/108/EC, Ecodesign Directive 2009/125/EC, Regulation 547/2012(for water pumps with a maximum shaft power of 150kW)** in the most recent form

The pump is subject to this declaration of conformity as a stand alone product. Make sure the appliance or installation in which the pump is built in, has got a declaration of compliance with the directives listed above, for its complete assembly.



Josep Unyó (Technical Manager)

ESPA 2025 SL
Ctra. de Mieres, s/n
17820 Banyoles, Girona
ESPAÑA

t +34 972 588 000
f +34 972 588 021

info@espa.com
www.espa.com

11/2013

BE00000377-F
Can be changed without prior notice
Original instructions