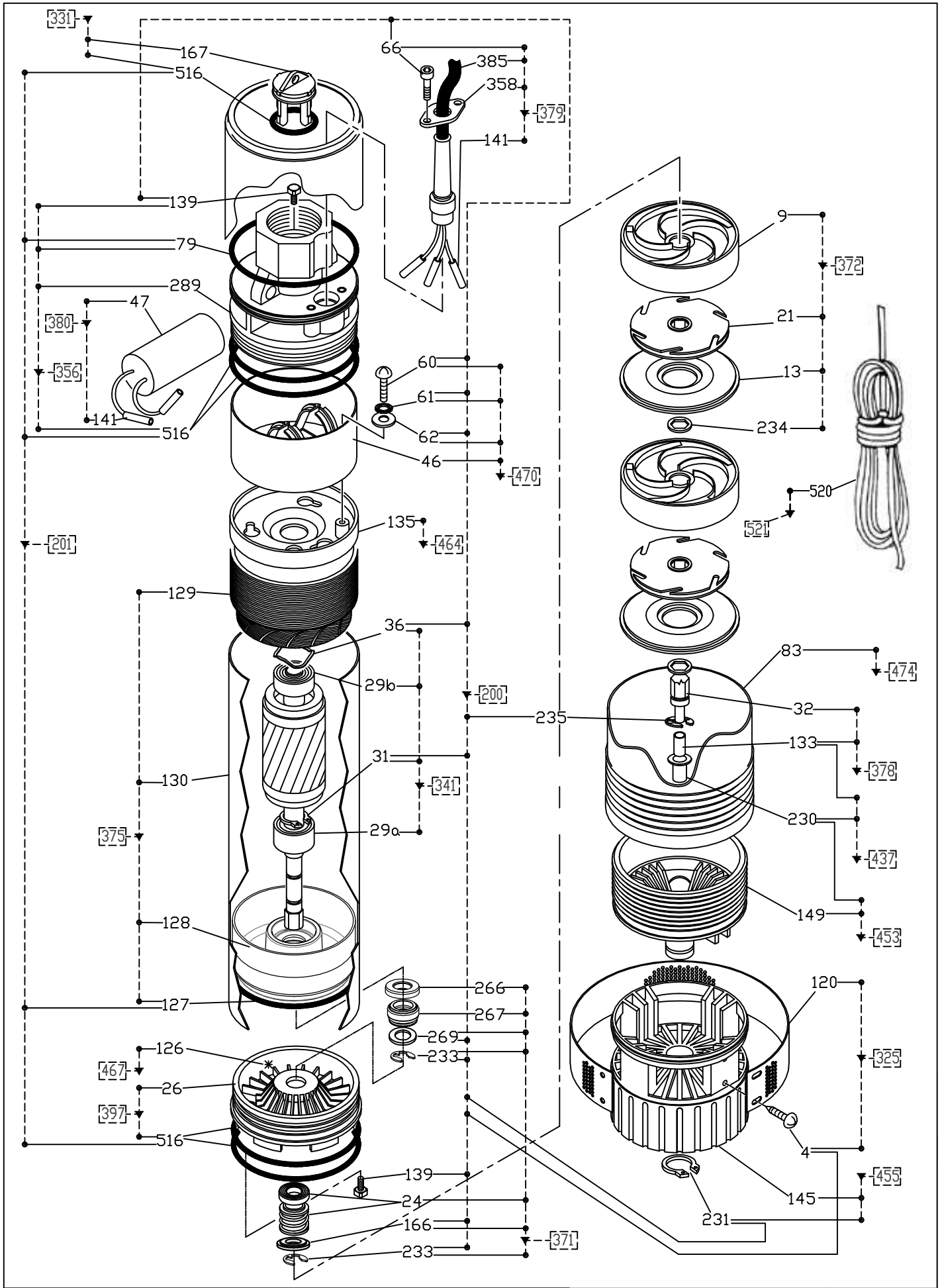

Pentair Water	Pentair Water Italy S.r.l. Via Masaccio,13 56010 Lugnano (PI) ITALY	Drawn: M.Di Nasso	Title: DOMINATOR 4 plus	Sheet: 1 of 1
		Approved: M.Bernacca	Date (dd/mm/yy): 24-03-2014	Dwg #: DR140001_00

This drawing is the absolute property of Pentair Water Italy S.r.l. It may not be reproduced in any form without the written permission of Pentair Water Italy S.r.l.